FOR PIPE PENETRATIONS UP TO LARGE DIAMETERS

# ArmaProtect FW2

## Firestop wrap

Firestop wrap for fire seals in walls and floors

// Non-combustible pipes up to Ø 323.9mm with combustible insulation
// Composite pipes
// Conduits and conduit bundles

www.armacell.com

armacell®
ArmaProtect™

# ENHANCING SAFETY LEVELS TO PROTECT PROPERTY AND SAVE LIVES.

PASSIVE FIRE PROTECTION (PFP) products and systems are designed to provide fire-safe circumstances in the event of a fire emergency. Often built as part of the building component, PFP measures are not visible to building users and hence often overlooked as a fire protection measure.

PFP systems include:

**// Building construction**
- Fire protection to the load bearing structure
- The building envelope, e.g. fire rated external walls, curtain walls etc.

**// Building services**
- Firefighting shafts and stairwells
- Fire rated service ducts and shafts
- Fire rated cable coatings
- Fire rated elevators for emergency use only

**// Ventilation systems**
- Fire rated ductwork including fire dampers
- Fire rated air transfer grilles (mechanical or intumescent)

**// Compartmentation**
- Partitions and floors
- Fire rated doors
- Service shafts
- Suspended ceilings
- Fire rated glazing
- Fire shutters
- Industrial fire shutters and curtains
- Cavity barriers
- Linear gap seals
- Penetration seals for pipes, cables and other services, also known as firestop systems

## COMPARTMENTATION

Regulated by building codes in many countries, buildings are sub-divided into "fire compartments" and in some cases also smoke compartments. In the event of a fire emergency in a building, the strategy is to keep the fire and smoke contained within a limited area of the building (the fire compartment) for a given amount of time (referred to as the fire rating). Fire ratings are country-dependent and typically ranges between 30 and 120 minutes (partly even up to 240 minutes).

Compartmentation contributes to a holistic fire safety strategy, and firestop systems is an integral measure to be considered.

Properly designed and installed, PFP systems complement fire compartments to provide multiple levels of fire safety, such as
- Providing building users sufficient time to safely make their way to a means of egress and escape from the building
- Keeping escape routes free from smoke and other toxic gasses, and
- Allowing emergency responders to safely rescue building users from the fire scene and attempt to extinguish the fire

Fire and flames cause severe harm but a key concern for humans is the inhalation of smoke and other toxic gasses. For example, if there is a hole as small as 10 mm (0.4") in diameter penetrating a fire rated floor or ceiling between the two rooms and a fire is to occur in a room, it would take less than 3 minutes for the adjacent room to be filled with smoke. In this situation, you would not be able to see your own hand even if placed just 45 cm (18") in front of you. Incapacitation and physical impairment due to smoke inhalation occurs even faster.

Apart from being a safety issue for humans, smoke can also cause severe damage to assets and equipment, for example in hospitals and data centres.

# STANDARDS


BUILDINGS ARE EQUIPPED WITH MECHANICAL AND ELECTRICAL SYSTEMS TO PROVIDE COMFORT, SAFETY AND SECURITY. SERVICES CONNECTED TO THESE APPLIANCES RUN ACROSS BUILDINGS AND PENETRATE FIRE RATED WALLS, FLOORS AND SERVICE SHAFTS, COMPROMISING THE FIRE COMPARTMENTATION STRATEGY.

Firestop systems are designed to seal penetrations of such services, including:

- Insulated and non-insulated combustible pipes
- Insulated and non-insulated non-combustible pipes
- Single cables and cable bundles
- Cable trays

These systems should be tested according to local governing fire standards and installed in line with the details shown in the fire test report.

At Armacell, safety comes first and maximum reliability is essential. As a systems solutions provider, we know firestop system requirements and standards and offer global support. This table provides an indicative overview of fire test standards for firestop systems globally.

WITH ARMACELL YOU'RE ALWAYS ON THE SAFE SIDE.

| Standard | Description | Geographic coverage |
|---|---|---|
| EN 1366-3 | Penetration seals | Europe |
| EN 1366-4 | Linear joints | Europe |
| EN 13501-2 | Fire classification of construction products and building elements | Europe |
| ISO 834 | Fire resistance tests | Europe |
| UL 263 | Fire tests of building construction and materials | Asia, Middle East, USA |
| UL 1479 | Fire test of through-penetration firestops | Asia, Middle East, USA |
| UL 2079 | Tests for fire resistance of building joint systems | Asia, Middle East, USA |
| ASTM E814-13 | Standard test method for fire tests of penetration firestop systems | Asia, Middle East, USA |

## EUROPEAN STANDARDS

The European Standards applicable to firestop systems are EN1366-3, EN1366-4 and EN13501-2. Fire rating is measured as EI (integrity and insulation) for a specific time duration, and written as EI 60, EI 90, EI 120, EI 180 or EI 240.

- E rating (integrity, "E" from French "Étanchéité"): This is the ability of a test component to stop fire from spreading to an unexposed side as a result of penetration of flames or smoke.
- I rating (insulation, "I" from French "Isolation"): This is the ability of a test component to restrict the temperature rise of the non-heated side to below specified levels during the fire, which is not more than +140 °C and up to +180 °C.

## UL 1479 FOR THROUGH-PENETRATION FIRESTOPS

This method exposes test samples of penetration firestops to a fire for a standard period of time and temperature and to an application of a hose stream. Ratings are then established based on the length of time the firestop is able to resist before the first development of through-openings or flaming on the unexposed surface, the acceptable limitation of thermal transmission and acceptable performance under the application of the hose stream test.

Two ratings are established for each penetration firestop system:

- F rating (F = fire): based upon flame occurrence on the unexposed side of the test sample and acceptable hose stream performance
- T rating (T = temperature) based on temperature rise and flame occurrence on the unexposed side of the test sample and acceptable hose stream performance.

## UL 2079 FOR FIRE RESISTANCE OF BUILDING JOINT SYSTEMS

These tests are applicable to joint systems of various materials and construction intended for use in linear openings between adjacent fire resistive structures. The fire endurance ratings for joint systems are intended to register performance during the period of fire exposure and are not intended to be interpreted as having determined the acceptability of the joint systems for use before or after fire exposure.

The intent of these methods is to develop data to assist others in determining the suitability of the joint systems where fire resistance is required.These requirements are intended to evaluate the length of time that the types of joint systems specified will contain a fire during a predetermined test exposure. The test evaluates the joint system's resistance to heat and, in some instances, to a hose stream, while carrying an applied load if the assembly is load bearing.

# ARMAPROTECT FIRESTOP SOLUTIONS

ArmaProtect firestop systems:

- are easy to install and highly reliable.
- have been globally tested.
- are certified in numerous combinations and configurations, making the range a "one-stop-shop" solution
- are easy to inspect and to maintain.

**Large, global approved range**

**Excellent fire performance**

**ArmaProtect CM**
**Firestop mortar**

Firestop mortar for mixed fire seals in walls and floors

- Blank openings
- Mixed and multiple services
- Cables, cable bundles and cable trays
- Conduit and conduit bundles
- Non-combustible and combustible pipes

**ArmaProtect CB**
**Coated fireboard system with ArmaProtect ABLC Firestop coating and ArmaProtect ABLF Firestop filler mastic**

Ablative coated board system for mixed fire seals in walls and floors

- Blank openings
- Mixed and multiple services
- Cables, cable bundles and cable trays
- Conduit and conduit bundles
- Non-combustible and combustible pipes

**ArmaProtect CU**
**Firestop cushion**

Firestop cushions for wall and floor openings

- Temporary or permanent sealing
- Cables and cable trays

**ArmaProtect CT**
**Firestop cable tube**

Cable tube for fire seals in walls and floors

- Blank openings
- Cables and cable bundles
- Conduit and conduit bundles
- Combustible pipes
- HVAC split-line combinations
- Ideally for retrofitting applications

**ArmaProtect EXPS**
**Firestop sealant**

Intumescent firestop sealant for mixed fire seals in walls and floors

- Blank openings
- Cables and cable bundles
- Conduit and conduit bundles
- Non-combustible and combustible pipes

**ArmaProtect FW1**
**Firestop wrap**

Firestop wrap for fire seals in walls and floors

- Cable bundles up to Ø150mm
- Combustible pipes up to Ø160mm

**ArmaProtect FW2**
**Firestop wrap**

Firestop wrap for fire seals in walls and floors

- Non-combustible pipes up to Ø323.9mm with combustible insulation
- Composite pipes
- Conduits and conduit bundles

**ArmaProtect FW3**
**Firestop wrap**

Firestop wrap for fire seals in walls and floors

- Combustible pipes Ø≤160mm (without combustible insulation)
- Combustible pipes Ø≤110mm (with combustible insulation)
- Multi-layer composite pipes Ø≤110mm

**ArmaProtect FC1 and FC2**
**Firestop collar**

Firestop collar for fire seals in walls and floors

For sealing of combustible pipes without insulation up to Ø160 mm (FC1) and Ø400 mm (FC2), respectively

**ArmaProtect EFC1 and EFC2**
**Endless firestop collar**

Endless firestop collar for fire seals in walls and floors

- Combustible pipes Ø≤ 160 mm (with and without sound insulation)
- Non-combustible pipes Ø≤ 108 mm (with combustible insulation)
- Multi-layer composite pipes Ø≤ 110 mm[1]

## SOLUTIONS WITH EN TESTING (ETA)

**// For small to large openings**

See relevant ETA for further installation details.

| | SMALL | MEDIUM | LARGE |
|---|---|---|---|
| **EXCEPTIONAL SOLUTION** ★★★ | ArmaProtect CT<br>▪ Pre-installed device<br>▪ Clean installation<br>▪ Easy re-penetration<br>▪ Openings up to Ø116mm<br>▪ Up to EI 120  | | |
| **SUPERIOR SOLUTION** ★★ | ArmaProtect EXPS<br>▪ Up to EI 120<br>▪ Openings up to Ø150mm <br>ArmaProtect ABLF<br>▪ Up to EI 90<br>▪ Openings up to Ø160mm  | ArmaProtect CB<br>▪ Easy re-penetration and maintenance<br>▪ Cable, pipe, mixed and multiple penetrations<br>▪ Up to EI 240<br>▪ Openings up to 1.4m x 2.0m or 1.2m x 2.4m, respectively  | |
| **STANDARD SOLUTION** ★ | ArmaProtect CM<br>▪ Cable, pipe, mixed and multiple penetrations<br>▪ Up to EI 240<br>▪ Openings up to 1.2m x 2.0m  | | |

**// For pipe penetrations**

See relevant ETA for further installation details.

| | SMALL TO MEDIUM PIPE DIAMETER | LARGE PIPE DIAMETER |
|---|---|---|
| **EXCEPTIONAL SOLUTION** ★★★ | ArmaProtect EFC1 and EFC2<br>▪ Flexible and clean installation<br>▪ Problem solver for special applications on job site<br>▪ Combustible pipes Ø≤ 160 mm (with and without sound insulation)<br>▪ Non-combustible pipes Ø≤ 108 mm (with combustible insulation)<br>▪ Multi-layer composite pipes Ø≤ 110 mm<br>▪ Up to EI 240  | ArmaProtect FC2<br>▪ Pre-formed product<br>▪ Clean installation<br>▪ Combustible pipes Ø≤ 400mm (without insulation)<br>▪ Up to EI 120  |
| **SUPERIOR SOLUTION** ★★ | ArmaProtect FC1<br>▪ Pre-formed product<br>▪ Clean installation<br>▪ Combustible pipes Ø≤160mm (without insulation)<br>▪ Up to EI 240  <br>ArmaProtect FW3<br>▪ Flexible and clean installation<br>▪ Combustible pipes Ø≤160mm (without combustible insulation)<br>▪ Combustible pipes Ø≤110mm (with combustible insulation)<br>▪ Multi-layer composite pipes Ø≤110mm<br>▪ Up to EI 120  | ArmaProtect FW2<br>▪ Flexible and clean installation<br>▪ Non-combustible pipes up to Ø323.9mm (with combustible insulation)<br>▪ Up to EI 120  |

## SOLUTIONS WITH UL TESTING (ACC. TO UL 1479 / ASTM E814)

**// For small to large openings**

See relevant UL systems for further installation details.

| | SMALL | MEDIUM | LARGE |
|---|---|---|---|
| **EXCEPTIONAL SOLUTION** ★★★ | ArmaProtect CT<br>▪ Pre-installed device<br>▪ Clean installation<br>▪ Easy re-penetration<br>▪ Openings up to Ø116mm<br>▪ Up to 3 h F rating  | ArmaProtect CU<br>▪ Pre-formed product<br>▪ Clean installation<br>▪ Easy re-penetration<br>▪ For temporary and temporary use<br>▪ Openings up to 400mm x 200mm<br>▪ Up to 3 h F rating  | |
| **SUPERIOR SOLUTION** ★★ | ArmaProtect FW1<br>▪ Flexible and clean installation<br>▪ Combustible pipes up to Ø160mm<br>▪ Cable bundles up to Ø150mm<br>▪ Up to 3 h fire rating  <br>ArmaProtect FW2<br>▪ Flexible and clean installation<br>▪ Non-combustible pipes up to Ø159mm<br>▪ Composite pipes<br>▪ Conduits and conduit bundles<br>▪ Up to 3 h fire rating  | ArmaProtect CB<br>▪ Easy re-penetration and maintenance<br>▪ Also tested for bus bars and ducts<br>▪ Up to 3 h F rating<br>▪ Openings up to 0.6m x 0.4m  | |
| **STANDARD SOLUTION** ★ | ArmaProtect CM<br>▪ Up to 3 h F rating<br>▪ Openings up to 0.6m x 0.4m  | | |

**// For pipe penetrations**

See relevant UL systems for further installation details.

| | COMBUSTIBLE PIPES | NON-COMBUSTIBLE PIPES |
|---|---|---|
| **SUPERIOR SOLUTION** ★★ | ArmaProtect FW1<br>▪ Flexible and clean installation<br>▪ Combustible pipes up to Ø160mm<br>▪ Also tested for cable bundles up to Ø150mm<br>▪ Up to 3 h fire rating  | ArmaProtect FW2<br>▪ Flexible and clean installation<br>▪ Non-combustible pipes up to Ø159mm<br>▪ PE/AL/PE composite pipe up to Ø63mm<br>▪ Also tested for PE-HD conduits up to Ø100mm (conduits Ø≤ 32mm), PE-HD conduits up to Ø50mm with speed pipe bundles and clima split bundles<br>▪ Up to 3 h fire rating  |

# INSTRUCTIONS FOR USE

Ensure that surfaces are dry and free of dust and grease.

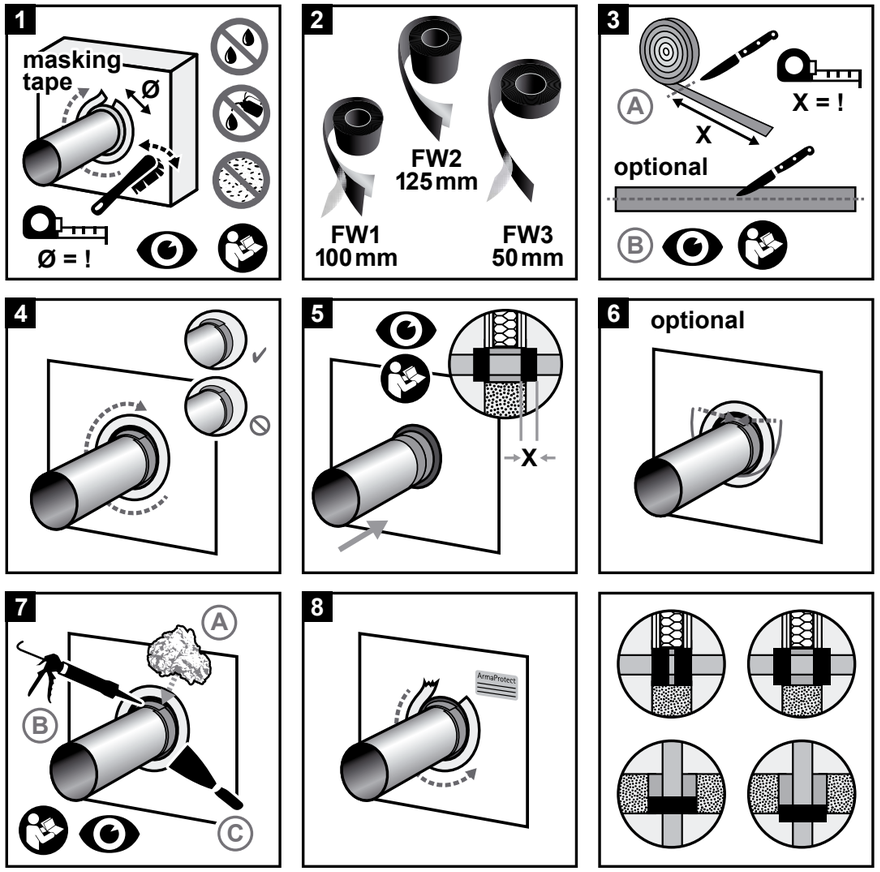


## // Consumption guide

Check consumption of ArmaProtect Firestop Wrap FW2 based on the pipe diameter and number of layers required. The table below provides an estimation for one layer of wrap based on the outside diameter of the pipe, conduit or conduit bundle. To avoid wastage, review the number of layers required and the potential need of overlapping the firestop wrap according to third party published listings or national approvals / assessments before cutting.

| Diameter of pipe / conduit / conduit bundle [mm] | Approximate length for one layer of firestop wrap [mm] |
|---|---|
| 32 | 110 |
| 40 | 140 |
| 50 | 170 |
| 63 | 215 |
| 75 | 255 |
| 90 | 310 |
| 110 | 370 |
| 125 | 425 |
| 140 | 480 |
| 160 | 550 |



# MAIN APPLICATIONS ACC. ETA-21/1026

| In drywalls, solid walls and concrete floors[1] | |
|---|---|
| Base material | Drywall, concrete wall, aerated concrete wall, masonry wall, shaft wall, concrete floor |
| Base material thickness | ≥ 100 mm (wall)<br>≥ 150 mm (floor) |
| Seal thickness | ≥ 100 mm (wall)<br>≥ 150 mm (floor) |
| Penetrants<br>Non-combustible pipe with insulation<br>• Steel pipes ≤ 323.9 mm<br>• Copper pipes ≤ 108.0 mm | up to EI 120-C/U[1] |

[1] See ETA 21/1026 for further installation details.

## // Typical ETA approved systems[1]

**Wall application (drywall)**

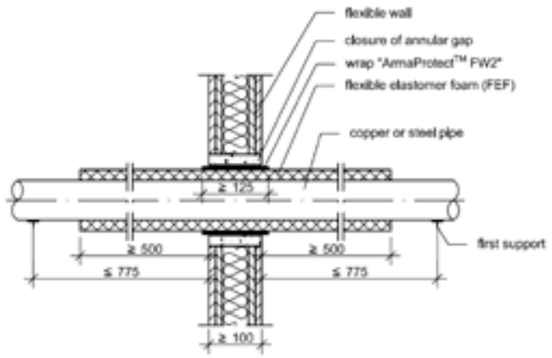


**Wall application (solid wall)**

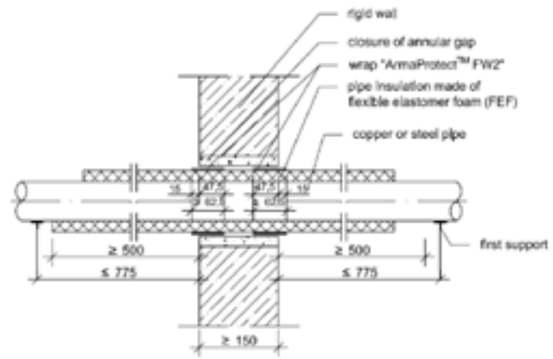


**Floor application**

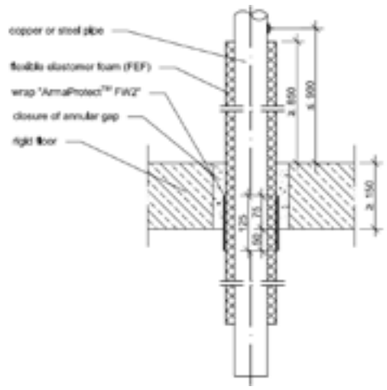


[1] See ETA 21/1026 for further installation details.

# UL APPROVED SYSTEMS

## // Typical UL approved systems[1]

| Penetrants | |
|---|---|
| • PE-HD conduit bundles | ≤ Ø 100 mm (conduits Ø ≤ 32 mm) |
| • PE-HD conduits with speed pipe bundles | ≤ Ø 50 mm |
| • PE/AL/PE composite pipe | ≤ Ø 63 mm |
| • Copper pipes | ≤ Ø 159 mm |
| • Clima split bundles | |
| • Mixed penetration seals | |

[1]See relevant UL system for further installation details.

## // Selected exemplary UL approved systems

**System No. C-AJ-2927 (composite pipe in floor opening)**

ANSI/UL 1479 (ASTM E814)
- F rating - 3 hours
- T rating - 3 hours

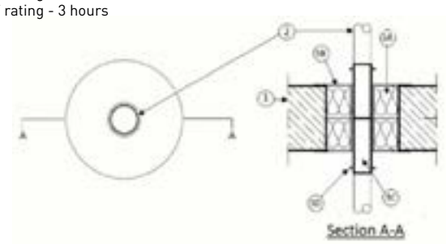


**System No. F-A-8061 (PE-HD bundle pipe bundle in floor opening)**

ANSI/UL 1479 (ASTM E814)
- F rating - 3 hours
- T rating - 2 hours

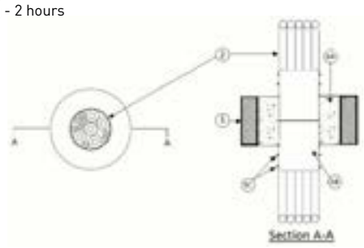


**System No. W-J-5210 (copper pipes in floor opening)**

ANSI/UL 1479 (ASTM E814)
- F rating - 3 hours
- T rating - 0 hours

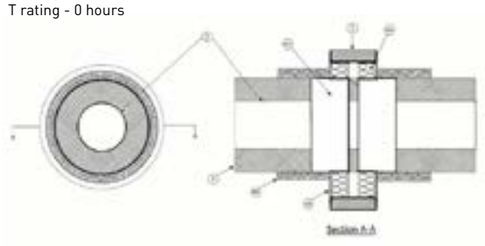


**System No. W-J-8092 (clima split bundle in floor opening)**

ANSI/UL 1479 (ASTM E814)
- F rating - 3 hours
- T rating - 1/2 hours

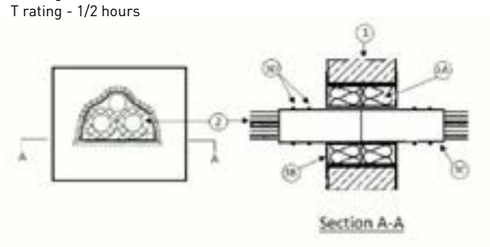


**System No. W-J-8093 (mixed penetration seal in wall opening)**

ANSI/UL 1479 (ASTM E814)
- F rating - 3 hours
- T rating - 1 hour

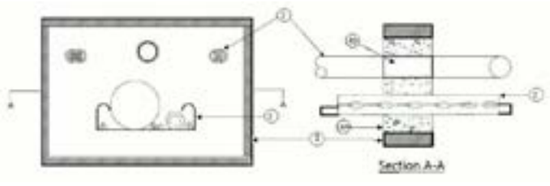




## TECHNICAL DATA - ARMAPROTECT FW2 FIRESTOP WRAP

| | |
|---|---|
| Brief description | ArmaProtect FW2 is a fabric-based firestop wrap that helps to maintain the fire resistance performance of fire penetrations in walls and floors. |
| Material type | Glass filament fabric composite with insulation layer forming coating on the inside. |
| Product colour range | Grey on the outside, anthracite on the inside. |
| Special features | Flexible and tear-resistant. |
| Product range | Firestop wrap roll with dimensions of 10m x 125mm x 1.5mm in a cardbox box. |
| Applications | Firestop wrap for fire seals in walls and floors for non-combustible pipes with combustible insulation, multi-layer composite pipes, conduits and conduit bundles. |
| Installation | For professional use only. Refer to third party published listings, national approvals / assessments and Armacell's product literature for specific application details as well as before handling this product. |
| Declaration of Performance (DoP) | ArmaProtect FW2 |

| Approvals and compliance | | |
|---|---|---|
| Specification compliance | • ETA-21/1026 acc. EN 1366-3 | • UL 1479 (ASTM E814) |

| Property | Value/Assessment | Standard/Test method |
|---|---|---|
| **Temperature range** | | |
| Operating temperature | -40°C to 70°C (-40°F to 158°F) | |
| Application temperature | 5°C to 25°C (41°F to 77°F) | |
| Storage and transportation temperature | 5°C to 25°C (41°F to 77°F) | |
| **Mechanical properties** | | |
| Weight per unit area | 2.0 g/m² | |
| **Fire performance** | | |
| Reaction to fire | Class B-s1,d0 | EN 13501-1 |
| Resistance to fire | See Annex | |
| **Health and environment** | | |
| Emission of dangerous substances | No dangerous substances. | ETAG 026-02 |
| **Other technical features** | | |
| Durability and serviceability | Use category type X. | EOTA TR 024 |
| Safety information | Please refer to the safety data sheet available on our website. | |
| Shelf life | No shelf life | |
| Storage | Store in a cool and dry place with an ambient temperature of 5 °C to 25 °C and protect from frost. | |

**Firestop wrap**

| Item | Description | Content |
|---|---|---|
| **PRO-FW2-10m** | ArmaProtect FW2 Firestop wrap | 10m |

**Firestop filler mastic**

| Item | Description | Content |
|---|---|---|
| **PRO-ABLF-12.5kg** | ArmaProtect ABLF Firestop filler mastic (white) packed in a pail. | 12.5 kg |
| **PRO-ABLF-15kg** | ArmaProtect ABLF Firestop filler mastic (white) packed in a pail. | 15 kg |
| **PRO-ABLF-310ml** | ArmaProtect ABLF Firestop filler mastic (white) packed in a cartridge. | 310 ml |

**Firestop mortar**

| Item | Description | Content |
|---|---|---|
| **PRO-CM-20kg** | ArmaProtect CM Firestop mortar (grey) packed in a bag. | 20 kg |

**Firestop wrap.**

| Item | Description | Content |
|---|---|---|
| **PRO-ID-SET** | ArmaProtect ID identification plate set | 5 pieces |



00585 | ArmaProtect FW2 | ArmaProtect | PDS | 022022 | en-WW

# ABOUT ARMACELL

As the inventors of flexible foam for equipment insulation and a leading provider of engineered foams, Armacell develops innovative and safe thermal, acoustic and mechanical solutions that create sustainable value for its customers. Armacell's products significantly contribute to global energy efficiency making a difference around the world every day. With more than 3,000 employees and 24 production plants in 16 countries, the company operates two main businesses, Advanced Insulation and Engineered Foams. Armacell focuses on insulation materials for technical equipment, high-performance foams for high-tech and lightweight applications and next generation aerogel blanket technology.

armacell®
ArmaProtect™

For more information, please visit:
**www.armacell.com**