INSTALL IT. ENSURE SAFETY.

ArmaProtect™

Firestop Handbook (ETA)

Armacell's dedicated firestop products are designed to provide fire-safe circumstances in the event of a fire emergency.

www.armacell.com

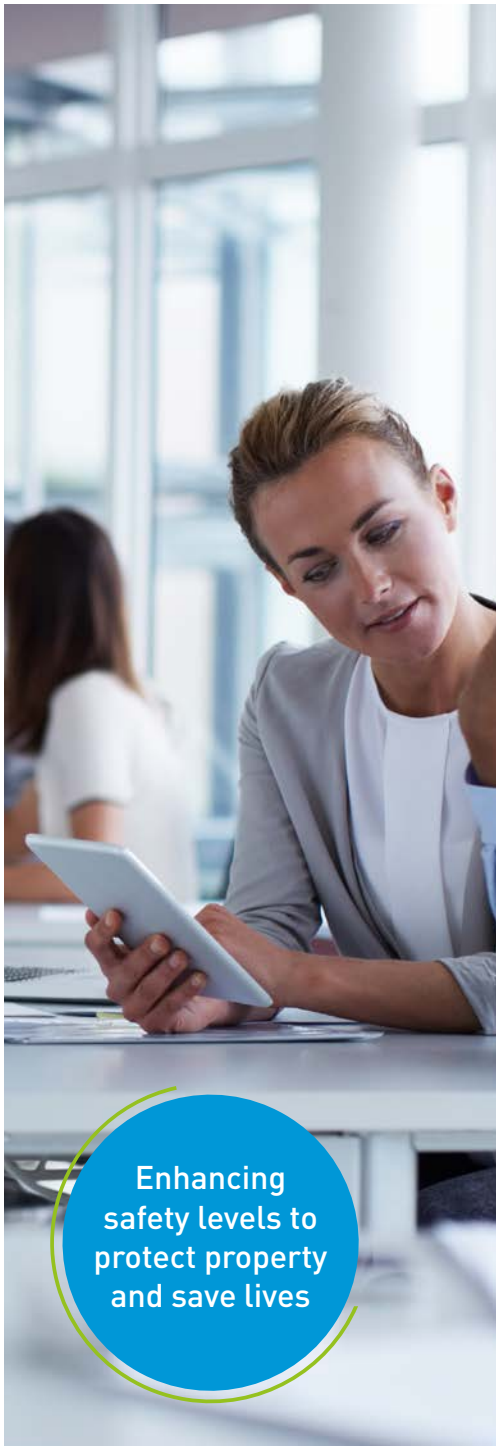

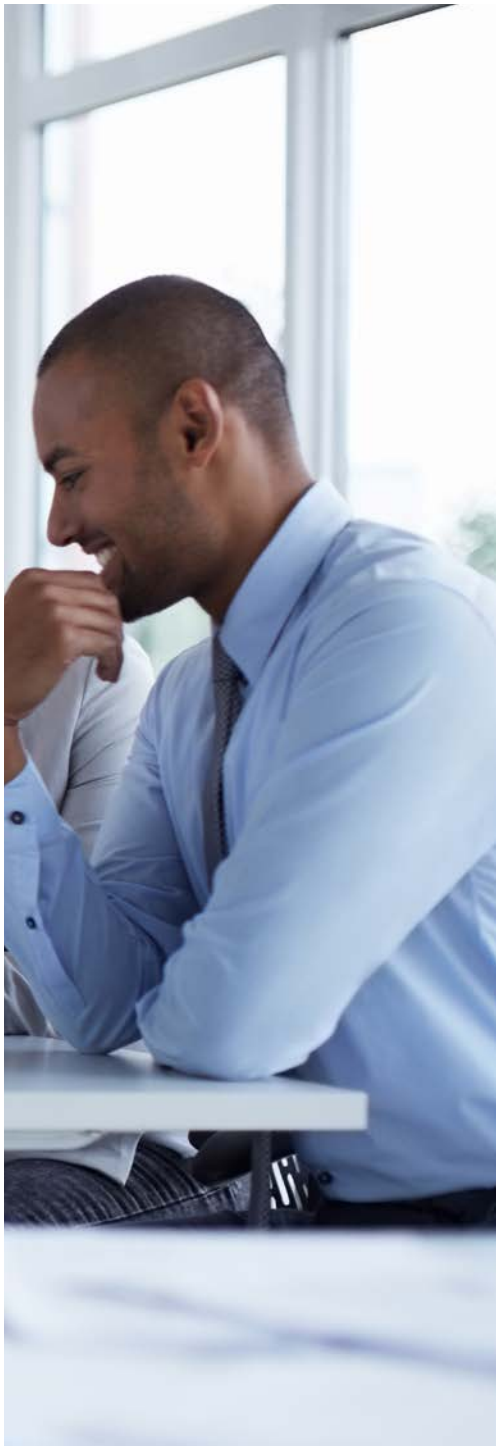

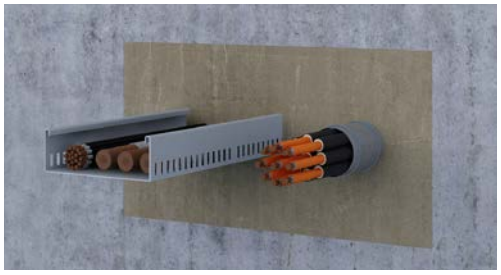

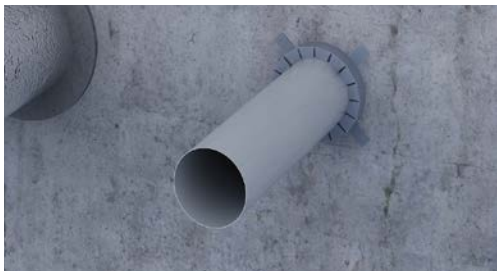

armacell®
ArmaProtect™

ArmaProtect

The new firestop portfolio from Armacell

- Comprehensive firestop range for almost all applications
- Globally approved and tested as a system (ETA, UL)
- Meeting the requirements of installers on the construction site

Armacell, a global leader in flexible foam for the equipment insulation market and a leading provider of engineered foams, presents a new firestop portfolio. The new ArmaProtect range is designed to provide safe conditions in the event of a fire. The products are certified in numerous combinations and configurations, making the ArmaProtect firestop range a one-stop-shop solution. They are easy to install, inspect and maintain.

Fire safety is top priority

The requirements for fire protection are increasing. Regulated by building codes, buildings are sub-divided in fire compartments. In the event of a fire, they keep fire and smoke contained in a limited area for a given amount of time. Fire ratings typically range from 30 to 120 or even up to 240 minutes

ArmaProtect firestop products reliably seal off penetrations in walls, floors or service shafts and keep escape routes free of smoke and toxic gases. This gives occupants valuable time to leave the building and rescue teams unhindered access for evacuation.

One-stop-shop solution

Whether flexible walls, rigid wall or rigid floors with cable and pipe penetrations – Armacell offers specifiers and installers compliant solutions for almost all firestop penetrations. The range includes intumescent firestop wraps, firestop collars, coated firestop boards, intumescent firestop sealants and mortars. The new ArmaProtect portfolio is an ideal addition to ArmaFlex Protect, Armacell's unique firestop solution which combines high fire resistance, condensation control and thermal insulation in a single product.

Increasing overall fire safety in a building

"In a fire, building services have a considerable impact on safety in buildings. Pipes, ducts and electrical cables penetrate fire compartments and thus form a path along which flames and smoke can spread. With the components of our new ArmaProtect firestop range, cables, pipes as well as mixed and multiple penetrations in fire walls and floors can be sealed reliably", explains Dr. Christoph Aubauer, Global Product Manager for passive fire protection at Armacell. *"With our new ArmaProtect Firestop range we enhance the safety level in buildings to protect property and save lives."*

Globally approved and tested as a system

All ArmaProtect products have been globally tested in accordance with EN and UL test standards the strict requirements of European Technical Assessment (ETA) and UL Solutions. They offer specifiable, reliable and flexible solutions for fire protection applications in residential, commercial and industrial buildings. To search for and select the suitable firestop system, Armacell offers the ArmaProtect Fire Stop System Selector on its website. Here, specifiers and installers also find ETAs, DOPs, technical data sheets, safety data sheets and application videos.

CONTENTS

04 • Introduction: Enhancing safety levels to protect property and save lives

08 • ArmaProtect Firestop solutions – overview

13 • Product selector - firestop solutions (ETA)

15 • ArmaProtect CM Firestop mortar

45 • ArmaProtect CB Coated firestop board system

112 • ArmaProtect EXPS Firestop cable tube

127 • ArmaProtect CT Firestop cable tube

143 • ArmaProtect FW2 Firestop wrap

153 • ArmaProtect FW3 Firestop wrap

166 • ArmaProtect FC1 Firestop collar

175 • ArmaProtect FC2 Firestop collar

200 • ArmaProtect EFC1 and EFC2 Endless firestop collar

226 • ArmaFlex Protect

ENHANCING SAFETY LEVELS TO PROTECT PROPERTY AND SAVE LIVES.

PASSIVE FIRE PROTECTION (PFP) products and systems are designed to provide fire-safe circumstances in the event of a fire emergency. Often built as part of the building component, PFP measures are not visible to building users and hence often overlooked as a fire protection measure.

PFP SYSTEMS INCLUDE

// Building construction

- Fire protection to the load bearing structure
- The building envelope, e.g. fire rated external walls, curtain walls etc.

// Building services

- Firefighting shafts and stairwells
- Fire rated service ducts and shafts
- Fire rated cable coatings
- Fire rated elevators for emergency use only

// Ventilation systems

- Fire rated ductwork including fire dampers
- Fire rated air transfer grilles (mechanical or intumescent)

// Compartmentation

- Partitions and floors
- Fire rated doors
- Service shafts
- Suspended ceilings
- Fire rated glazing
- Fire shutters
- Industrial fire shutters and curtains
- Cavity barriers
- Linear gap seals
- Penetration seals for pipes, cables and other services, also known as firestop systems

COMPARTMENTATION

Regulated by building codes in many countries, buildings are sub-divided into "fire compartments" and in some cases also smoke compartments. In the event of a fire emergency in a building, the strategy is to keep the fire and smoke contained within a limited area of the building (the fire compartment) for a given amount of time (referred to as the fire rating). Fire ratings are country-dependent and typically ranges between 30 and 120 minutes (partly even up to 240 minutes).

Properly designed and installed, PFP systems complement fire compartments to provide multiple levels of fire safety, such as

- Providing building users sufficient time to safely make their way to a means of egress and escape from the building
- Keeping escape routes free from smoke and other toxic gasses, and
- Allowing emergency responders to safely rescue building users from the fire scene and attempt to extinguish the fire

Fire and flames cause severe harm but a key concern for humans is the inhalation of smoke and other toxic gasses. For example, if there is a hole as small as 10mm (0.4") in diameter penetrating a fire rated floor or ceiling between the two rooms and a fire is to occur in a room, it would take less than 3 minutes for the adjacent room to be filled with smoke. In this situation, you would not be able to see your own hand even if placed just 45 cm (18") in front of you. Incapacitation and physical impairment due to smoke inhalation occurs even faster.

Apart from being a safety issue for humans, smoke can also cause severe damage to assets and equipment, for example in hospitals and data centres.

Compartmentation contributes to a holistic fire safety strategy, and firestop systems is an integral measure to be considered.

STANDARDS

Buildings are equipped with mechanical and electrical systems to provide comfort, safety and security. Services connected to these appliances run across buildings and penetrate fire rated walls, floors and service shafts, compromising the fire compartmentation strategy.

Firestop systems are designed to seal penetrations of such services, including:

- Insulated and non-insulated combustible pipes
- Insulated and non-insulated non-combustible pipes
- Single cables and cable bundles
- Cable trays

These systems should be tested according to local governing fire standards and installed in line with the details shown in the fire test report.

At Armacell, safety comes first and maximum reliability is essential. As a systems solutions provider, we know firestop system requirements and standards and offer global support. This table provides an indicative overview of fire test standards for firestop systems globally.

WITH ARMACELL YOU'RE ALWAYS ON THE SAFE SIDE.

Standard	Description	Geographic coverage
EN 1366-3	Penetration seals	Europe
EN 1366-4	Linear joints	Europe
EN 13501-2	Fire classification of construction products and building elements	Europe
ISO 834	Fire resistance tests	Europe
UL 263	Fire tests of building construction and materials	Asia, Middle East, USA
UL 1479	Fire test of through-penetration firestops	Asia, Middle East, USA
UL 2079	Tests for fire resistance of building joint systems	Asia, Middle East, USA
ASTM E814-13	Standard test method for fire tests of penetration firestop systems	Asia, Middle East, USA

European standards

The European Standards applicable to firestop systems are EN1366-3, EN1366-4 and EN13501-2. Fire rating is measured as EI (integrity and insulation) for a specific time duration, and written as EI 60, EI 90, EI 120, EI 180 or EI 240.

- E rating (integrity, "E" from French "Étanchéité"): This is the ability of a test component to stop fire from spreading to an unexposed side as a result of penetration of flames or smoke.
- I rating (insulation, "I" from French "Isolation"): This is the ability of a test component to restrict the temperature rise of the non-heated side to below specified levels during the fire, which is not more than +140 °C and up to +180 °C.

UL 1479 for Through-penetration firestops

This method exposes test samples of penetration firestops to a fire for a standard period of time and temperature and to an application of a hose stream. Ratings are then established based on the length of time the firestop is able to resist before the first development of through-openings or flaming on the unexposed surface, the acceptable limitation of thermal transmission and acceptable performance under the application of the hose stream test.

Two ratings are established for each penetration firestop system:

- F rating (F = fire): based upon flame occurrence on the unexposed side of the test sample and acceptable hose stream performance
- T rating (T = temperature) based on temperature rise and flame occurrence on the unexposed side of the test sample and acceptable hose stream performance.

UL 2079 for fire resistance of building joint systems

These tests are applicable to joint systems of various materials and construction intended for use in linear openings between adjacent fire resistive structures.The fire endurance ratings for joint systems are intended to register performance during the period of fire exposure and are not intended to be interpreted as having determined the acceptability of the joint systems for use before or after fire exposure.

The intent of these methods is to develop data to assist others in determining the suitability of the joint systems where fire resistance is required.These requirements are intended to evaluate the length of time that the types of joint systems specified will contain a fire during a predetermined test exposure. The test evaluates the joint system's resistance to heat and, in some instances, to a hose stream, while carrying an applied load if the assembly is load bearing.

ARMAPROTECT FIRESTOP SOLUTIONS

ArmaProtect CM

Firestop mortar for mixed fire seals in walls and floors

- Blank openings
- Mixed and multiple services
- Cables, cable bundles and cable trays
- Conduit and conduit bundles
- Non-combustible and combustible pipes

ArmaProtect CB ArmaProtect ABLC, ArmaProtect ABLF

Ablative coated fireboard system for mixed fire seals in walls and floors with firestop coating and firestop filler mastic

- Blank openings
- Mixed and multiple services
- Cables, cable bundles and cable trays
- Conduit and conduit bundles
- Non-combustible and combustible pipes

ArmaProtect CU

Firestop cushions for wall and floor openings

- Temporary or permanent sealing
- Cables and cable trays

ArmaProtect FW1

Firestop wrap for fire seals in walls and floors

- Cable bundles up to Ø150mm
- Combustible pipes up to Ø160mm

ArmaProtect FW2

Firestop wrap for fire seals in walls and floors

- Non-combustible pipes up to Ø323.9mm with combustible insulation
- Composite pipes
- Conduits and conduit bundles

ArmaProtect FW3

Firestop wrap for fire seals in walls and floors

- Combustible pipes Ø≤160mm (without combustible insulation)
- Combustible pipes Ø≤110mm (with combustible insulation)
- Multi-layer composite pipes Ø≤110mm

ARMAPROTECT FIRESTOP SYSTEMS:

- are easy to install and highly reliable.
- have been globally tested.
- are certified in numerous combinations and configurations, making the range a "one-stop-shop" solution
- are easy to inspect and to maintain.

Large, global approved range

Excellent fire performance

ArmaProtect CT

Cable tube for fire seals in walls and floors

- Blank openings
- Cables and cable bundles
- Conduit and conduit bundles
- Combustible pipes
- HVAC split-line combinations
- Ideally for retrofitting applications

ArmaProtect EXPS

Intumescent firestop sealant for mixed fire seals in walls and floors

- Blank openings
- Cables and cable bundles
- Conduit and conduit bundles
- Non-combustible and combustible pipes

ArmaProtect FC1 and FC2

Firestop collar for fire seals in walls and floors

- For sealing of combustible pipes without insulation up to Ø160mm (FC1) and Ø400mm (FC2), respectively

ArmaProtect EFC1 and EFC2

Endless firestop collar for fire seals in walls and floors

- Combustible pipes Ø≤ 160mm (with and without sound insulation), Ø≤ 110mm (with combustible insulation)
- Non-combustible pipes Ø≤ 108mm (with combustible insulation)
- Multi-layer composite pipes Ø≤ 110mm

SOLUTIONS WITH EN TESTING (ETA)

For small to large openings

See relevant ETA for further installation details.

	SMALL	MEDIUM	LARGE
EXCEPTIONAL SOLUTION ★★★	ArmaProtect CT ▪ Pre-installed device ▪ Clean installation ▪ Easy re-penetration ▪ Openings up to Ø116mm ▪ Up to EI 120	ArmaProtect CB ▪ Easy re-penetration and maintenance ▪ Cable, pipe, mixed and multiple penetrations ▪ Up to EI 240 ▪ Openings up to 1.4m x 2.0m or 1.2m x 2.4m, respectively	
SUPERIOR SOLUTION ★★☆	ArmaProtect EXPS ▪ Up to EI 120 ▪ Openings up to Ø160mm ArmaProtect ABLF ▪ Up to EI 90 ▪ Openings up to Ø160mm		
STANDARD SOLUTION ★☆☆	ArmaProtect CM ▪ Cable, pipe, mixed and multiple penetrations ▪ Up to EI 240 ▪ Openings up to 1.2m x 2.0m		

For pipe penetrations

See relevant ETA for further installation details.

	SMALL TO MEDIUM PIPE DIAMETER	LARGE PIPE DIAMETER
EXCEPTIONAL SOLUTION ★★★	ArmaProtect EFC1 and EFC2 ▪ Flexible and clean installation ▪ Problem solver for special applications on job site ▪ Combustible pipes Ø≤ 160mm (with and without sound insulation), Ø≤ 110mm (with combustible insulation) ▪ Non-combustible pipes Ø≤ 108mm (with combustible insulation) ▪ Multi-layer composite pipes Ø ≤ 110mm ▪ Up to EI 240	ArmaProtect FC2 ▪ Pre-formed product ▪ Clean installation ▪ Combustible pipes Ø≤ 400mm (without insulation) ▪ Up to EI 120
SUPERIOR SOLUTION ★★☆	ArmaProtect FC1 ▪ Pre-formed product ▪ Clean installation ▪ Combustible pipes Ø≤160mm (without insulation) ▪ Up to EI 240 ArmaProtect FW3 ▪ Flexible and clean installation ▪ Combustible pipes Ø≤160mm (without combustible insulation) ▪ Multi-layer composite pipes Ø≤110mm (with combustible insulation) ▪ Up to EI 120	ArmaProtect FW2 ▪ Flexible and clean installation ▪ Non-combustible pipes up to Ø323.9mm (with combustible insulation) ▪ Up to EI 120

European Technical Assessments:
ETA-21/1024, ETA-21/1025, ETA-21/1026, ETA-21/1099, ETA-22/0060, ETA-22/0061, ETA-22/0062, ETA-22/0063, ETA-22/0064

SOLUTIONS WITH UL TESTING (ACC. TO UL 1479 / ASTM E814)

For small to large openings

See relevant UL systems for further installation details.

	SMALL	MEDIUM	LARGE
EXCEPTIONAL SOLUTION ★★★	ArmaProtect CT ▪ Pre-installed device ▪ Clean installation ▪ Easy re-penetration ▪ Openings up to Ø116mm ▪ Up to 3 h F rating	ArmaProtect CU ▪ Pre-formed product ▪ Clean installation ▪ Easy re-penetration ▪ For temporary and temporary use ▪ Openings up to 400mm x 200mm ▪ Up to 3 h F rating	
SUPERIOR SOLUTION ★★☆	ArmaProtect FW1 ▪ Flexible and clean installation ▪ Combustible pipes up to Ø160mm ▪ Cable bundles up to Ø150mm ▪ Up to 3 h fire rating ▪	ArmaProtect CB ▪ Easy re-penetration and maintenance ▪ Also tested for bus bars and ducts ▪ Up to 3 h F rating ▪ Openings up to 0.6m x 0.4m	
	ArmaProtect FW2 ▪ Flexible and clean installation ▪ Non-combustible pipes up to Ø159mm ▪ Composite pipes ▪ Conduits and conduit bundles ▪ Up to 3 h fire rating		
STANDARD SOLUTION ★☆☆	ArmaProtect CM ▪ Up to 3 h F rating ▪ Openings up to 0.6m x 0.4m		

For pipe penetrations

See relevant UL systems for further installation details.

	COMBUSTIBLE PIPES	NON-COMBUSTIBLE PIPES
SUPERIOR SOLUTION ★★☆	ArmaProtect FW1 • Flexible and clean installation • Combustible pipes up to Ø160mm • Also tested for cable bundles up to Ø150mm • Up to 3 h fire rating	ArmaProtect FW2 • Flexible and clean installation • Non-combustible pipes up to Ø159mm • PE/AL/PE composite pipe up to Ø63mm • Also tested for PE-HD conduits up to Ø100mm (conduits Ø≤ 32mm), PE-HD conduits up to Ø50mm with speed pipe bundles and clima split bundles • Up to 3 h fire rating

ARMAFLEX PROTECT FIRESTOP SOLUTIONS

For pipe applications

See relevant ETA for further installation

EXCEPTIONAL SOLUTION ★★★	SMALL TO MEDIUM PIPE DIAMETER
	• Firestop and thermal insulation in one step • Quick and easy installation • up to EI 120 • Can be combined with ArmaFlex products as continued insulation

European Technical Assessment:
ETA-11/0454

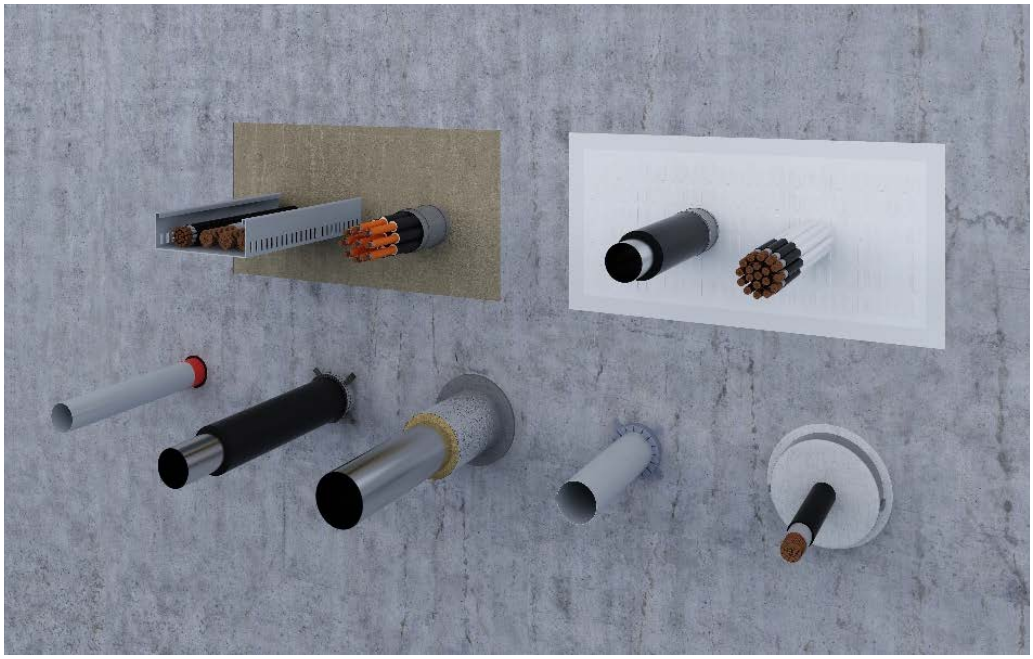

PRODUCT SELECTOR
FIRESTOP SOLUTIONS (ETA)

ArmaProtect Firestop Solutions (ETA)[1]								
	ArmaProtect CM Firestop Mortar			ArmaProtect CB Firestop Coated Board System			Arma-Protect CT Firestop Cable Tube	Arma-Protect EXPS Firestop Sealant
	in drywall (flexible wall) up to EI120	in rigid wall and floor up to EI 120	in rigid wall and floor up to EI 240	in drywall (flexible wall), rigid wall and floor up to EI 60 (single board system)	in drywall (flexible wall), rigid wall and floor up to EI 120 (double board system)	in rigid wall and floor up to EI 240 (quad-ruple board system)	in drywall (flexible wall), rigid wall and floor	in drywall, rigid wall and floor
FIRE RATING								
EI 30	x	x	x	x	x	x	x	x
EI 60	x	x	x	x	x	x	x	x
EI 90	x	x	x		x	x	x	x
EI 120	x	x	x		x	x	x	x
EI 240			x			x		
BASE MATERIAL								
Drywall (flexible wall)	x			x	x		x	x
Rigid wall		x	x	x	x	x	x	x
Concrete floor		x	x	x	x	x	x	x
PENETRATION								
Cables	x	x	x	x	x	x	x	x
Cable bundles	x	x	x	x	x	x	x	x
Cable trays	x	x	x	x	x	x		
Conduits	x	x		x	x		x	x
Conduits bundles	x	x		x	x		x	x
HVA split combinations (clima split)		x		x	x		x	
Speed pipes/ fibre glass	x	x		x	x		x	
Non-combustible pipes		x		x	x			x
Multi-layer composite pipes		x		x	x			x
Combustible pipes		x		x	x		x	x
Mixed penetration	x	x		x	x			
Multiple penetration	x	x	x	x	x	x		
OPENING								
Blank opening	x	x	x	x	x	x	x	
Small opening (approx. up to 200mm x 200mm)	x	x	x	x	x	x	x	x
Medium opening (approx. up to 400mm x 400mm)	x	x	x	x	x	x		
Large opening (≥ approx. 400mm x 400mm)	x	x	x	x	x	x		

[1] See relevant ETAs for further details

ArmaProtect Firestop Solutions (ETA)[1]							
	ArmaProtect™ FW2 Firestop Wrap	ArmaProtect™ FW3 Firestop Wrap	ArmaProtect™ FC1 Firestop Collar	ArmaProtect™ FC2 Firestop Collar	ArmaProtect™ EFC1 Endless Firestop Collar	ArmaProtect™ EFC2 Endless Firestop Collar	ArmaFlex Protect
FIRE RATING							
EI 30	x	x	x	x	x	x	x
EI 60	x	x	x	x	x	x	x
EI 90	x	x	x	x	x	x	x
EI 120	x	x	x	x	x	x	x
EI 240			x				
BASE MATERIAL							
Concrete floor	x	x	x	x	x	x	x
Drywall (flexible wall)	x	x	x	x	x	x	x
Rigid wall	x	x	x	x	x	x	x
Shaft wall	x				x	x	
PENETRATION							
Non-combustible pipes	x				x	x	x
Multi-layer composite pipes		x			x	x	x
Combustible pipes		x	x	x	x	x	
OPENING							
Small opening (approx. up to 200mm x 200mm)	x	x	x	x	x	x	x
Medium opening (approx. up to 400mm x 400mm)	x			x			x

[1] See relevant ETAs for further details

ArmaProtect CM
Firestop mortar

INSTRUCTIONS FOR USE

Before you begin, ensure surfaces are solid and free of any adhesion-reducing substances such as dust. Absorbent surfaces should be pre-wet with water. The mortar consistency needs to be adapted so that all components are filled without cavities.

// Wall installation

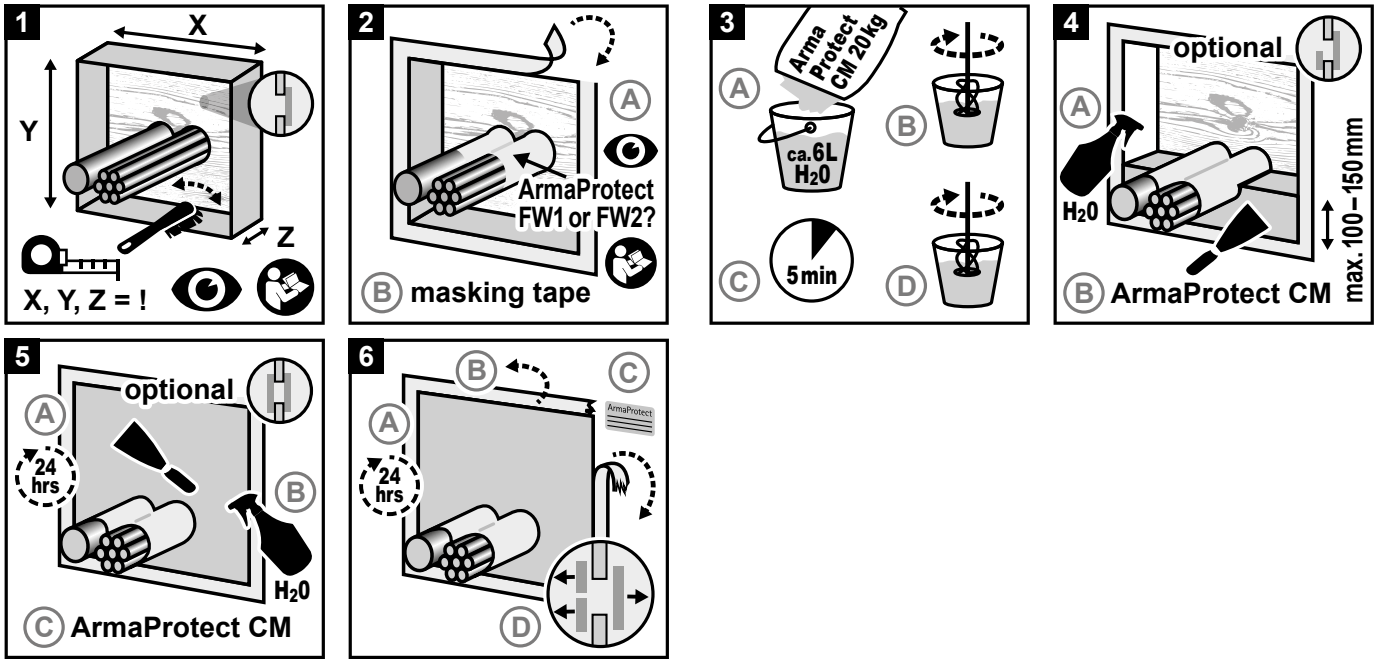

// Repairing cracks

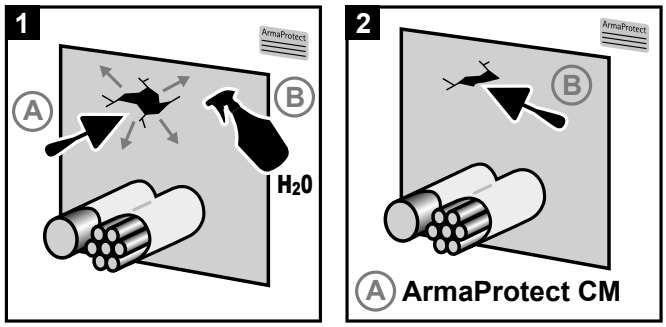

// Repenetration

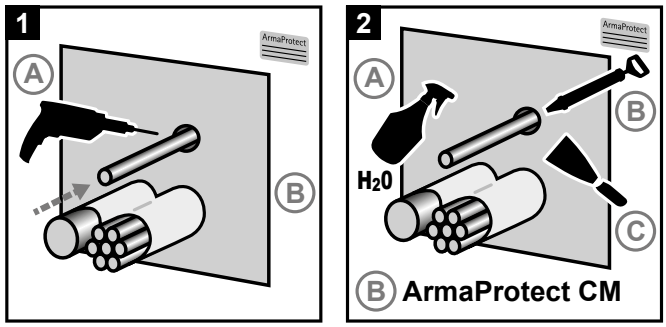

// Floor installation

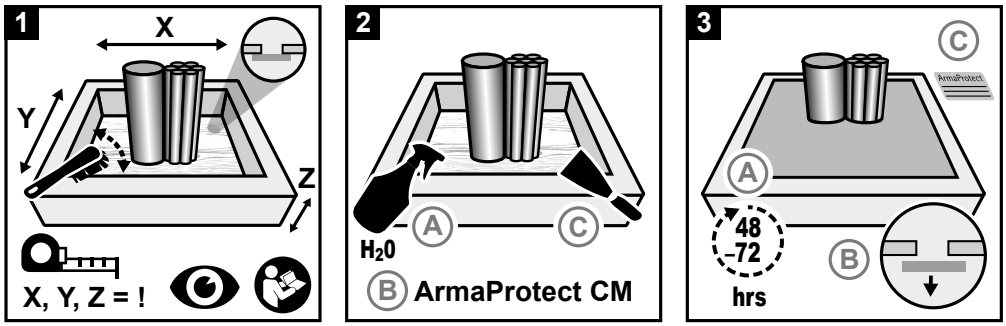

// Consumption guide

Approximate consumption [kg]			
Maximum sealing size [m²]*	0% services	30% servces	60% services
0.01	1.50	1.05	0.60
0.02	3.00	1.10	1.20
0.03	4.50	3.15	1.80
0.05	7.50	5.25	3.00
0.10	15.00	10.50	6.00
0.20	30.00	21.00	12.00
0.30	45.00	31.50	18.00
0.50	75.00	52.50	30.00
1.00	150.00	105.00	60.00

Take note of potential material loss during application at the job site.

* Calculated for installation thickness of 150 mm.

MAIN APPLICATIONS ACC. ETA-22/0064

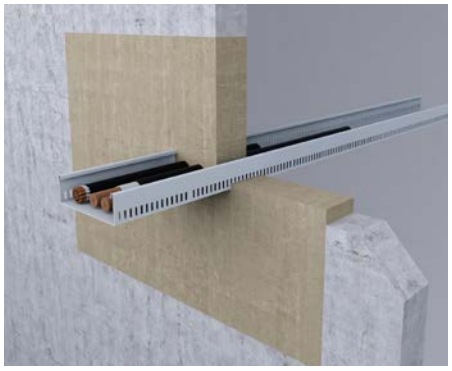
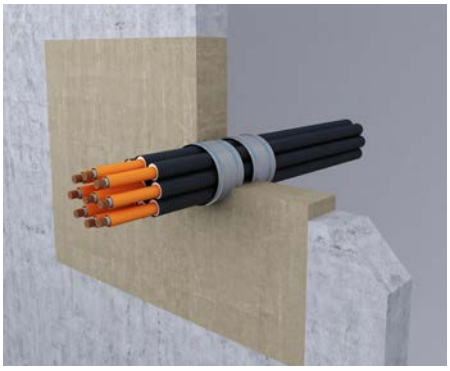
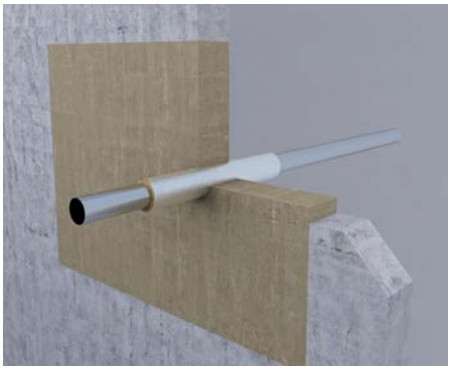

In drywalls[1]

Base material	Drywall
Base material thickness	⩾ 100 mm
Seal thickness	⩾ 100 mm
Maximum seal size (wall)	550 mm x 600 mm
Penetrants • Cables ⩽ Ø 80 mm[2] • Cable bundles ⩽ Ø 150 mm (with cables ⩽ Ø 21 mm)[2] • Cable trays[2] • Plastic conduits ⩽ Ø 32 mm (with cables ⩽ Ø 21 mm)[3] • Plastic conduit bundles ⩽ Ø 100 mm (conduits ⩽ Ø 32 mm, with cables ⩽ Ø 21 mm)[3] • Plastic conduits ⩽ Ø 32 mm (with cables ⩽ Ø 21 mm)[3] • PE lines "speed pipes" (24 x ⩽ Ø 7.0 mm, 7 x ⩽ Ø 10.0 mm, 5 x ⩽ Ø 12.0 mm)[1]	up to EI 120[1]

[1] See ETA-22/0064 for further installation details.
[2] For cables > 21 mm and cable bundles use 2 x 2-layers ArmaProtect FW2, 125 mm outside seal.
[3] Use 2 x 2-layers ArmaProtect FW2, 50 mm inside seal / 75 mm outside seal.

In solid walls and concrete floors[1]

Base material	Concrete wall, aerated concrete wall, masonry wall, concrete floor
Base material thickness	⩾ 150 mm (wall) ⩾ 150 mm (floor)
Seal thickness	⩾ 150 mm (wall) ⩾ 150 mm (floor)
Maximum seal size (wall)	1200 mm x 1200 mm
Maximum seal size (floor)	1200 mm x 2000 mm
Penetrants • Cables ⩽ Ø 80 mm[2] • Cable bundles ⩽ Ø 100 mm (with cables ⩽ Ø 21 mm)[3] • Cable trays[1] • Plastic conduits ⩽ Ø 63 mm (with cables ⩽ Ø 21 mm)[4] • Plastic conduit bundles ⩽ Ø 100 mm (conduits ⩽ Ø 32 mm, with cables ⩽ Ø 21 mm)[5] • PE lines "speed pipes" (24 x ⩽ Ø 7.0 mm, 7 x ⩽ Ø 10.0 mm, 5 x ⩽ Ø 12.0 mm)1 • Non-combustible pipe with mineral wool insulation (steel pipes ⩽ Ø 323.9 mm, copper pipes ⩽ Ø 88.9 mm)[1] • Non-combustible pipe with FEF insulation (steel pipes ⩽ Ø 168.3 mm, copper pipes ⩽ Ø 108 mm)[1] • Multi-layer composite pipes ⩽ Ø 63 mm[1] • Combustible pipes ⩽ Ø 160 mm[1] • HVAC split-line-combinations[1]	up to EI 120[1]

[1] See ETA-22/0064 for further installation details.
[2] For cables ⩽ 50 mm use 2 x 2-layers ArmaProtect FW2, 125 mm outside seal, for cables > 50 mm use 2 x 2-layers ArmaProtect FW2, 125 mm (EI 90) or 150 mm (EI 120) outside seal.
[3] Use 2 x 1-layer ArmaProtect FW2, 125 mm outside seal.
[4] Use 2 x 2-layers ArmaProtect FW2.

In solid walls and concrete floors[1]	
Base material	Concrete wall, aerated concrete wall, masonry wall, concrete floor
Base material thickness	≥ 240 mm (wall) ≥ 200 mm (floor)
Seal thickness	≥ 240 mm (wall) ≥ 240 mm (floor)
Maximum seal size (wall)	600 mm x 600 mm
Maximum seal size (floor)	600 mm x 600 mm
Penetrants • Cables ≤ Ø 80 mm[1] • Cable bundles ≤ Ø 100 mm (with cables ≤ 21 mm)[1] • Cable trays[1]	up to EI 240[1]

[1] See ETA-22/0064 for further installation details.

OTHER APPROVED APPLICATIONS ACC. ETA-22/0064

ArmaProtect CT firestop cable tube (150 mm length) in ArmaProtect CM penetration for retrofitting in walls[1]	
Penetrants • Cables ≤ Ø 50 mm[1] • Cable bundles ≤ Ø 107 mm (with cables ≤ Ø 21 mm)[1] • Plastic conduits ≤ Ø 32 mm (with cables ≤ Ø 14mm)[1] • HVAC split line combinations[1]	up to EI 90[1]

[1] See ETA-22/0064 for further installation details.

// Field of application and installation details[1]

Installation details

Base material thickness	
Flexible wall (drywall) or rigid wall (concrete, aerated concrete wall, masonry) or rigid wall (concrete, aerated concrete, masonry)	⩾ 100mm ⩾ 150mm or ⩾ 240mm
Rigid floor (concrete or aerated concrete)	⩾ 150mm or ⩾ 200mm
Intumescent wrap	ArmaProtect FW2 or ArmaProtect FW1 Fixation with steel wire Ø ⩾ 1.0mm.

First support of the services both-sided of the separating element	
Cables, cable bundles, cable trays	⩽ 500mm (wall) ⩽ 400mm (floor)
Conduits	⩽ 500mm
PE lines "speed pipes" for glass-fibre and micro-cables	The manufacturer's installation instructions are applied.
HVAC split line combinations	⩽ 500mm
Non-combustible pipes with non-combustible insulation	Local insulation + 50mm
Non-combustible pipes with combustible insulation (FEF)	Local insulation + 50mm
Double solar pipes "NanoSUN²"	⩽ 500mm
Multi-layer composite pipes "HENCO pipes"	⩽ 400mm
Combustible pipes	⩽ 500mm
Hydraulic hoses "HANSA FLEX" with wire-braid reinforcement	
ArmaProtect CT firestop cable tube	⩽ 300mm

Maximum opening size

Structural element	Penetration seal	Maximum dimensions of the opening
Flexible wall and rigid walls ⩾ 100mm	⩾ 100mm	550mm x 600mm or equivalent area
Rigid walls and floors ⩾ 150mm	⩾ 150mm	1200mm x 2000mm or equivalent area
Rigid walls ⩾ 240mm and floors ⩾ 200mm	⩾ 240mm	600mm x 600mm or equivalent area

Distance requirements

Distance requirements in electrical penetration seals for flexible wall applications (≥ 100mm) in mm

Distances

<table>
<tr><th rowspan="2">Distances wall</th><th rowspan="2">Cables</th><th rowspan="2">Cable bundles</th><th rowspan="2">Cable trays</th><th rowspan="2">Conduit / conduit bundles</th><th rowspan="2">ArmaProtect CT</th><th colspan="3">Side edge</th></tr>
<tr><th>Upper</th><th>Under</th><th>Side</th></tr>
<tr><td>Cables</td><td colspan="3" rowspan="5">≥ 5mm (side by side)
≥ 50mm (above the other)</td><td>≥ 5 (side by side)
≥ 50
(above the other)</td><td rowspan="5">≥ 50</td><td>≥ 50</td><td rowspan="4">≥ 0</td><td rowspan="6">≥ 5</td></tr>
<tr><td>Cable bundles
Ø ≤ 60mm</td><td>≥ 75</td><td>≥ 100</td></tr>
<tr><td>Cable bundles
Ø ≤ 60mm</td><td rowspan="3">≥ 5 (side by side)
≥ 50
(above the other)</td><td rowspan="3">≥ 50</td></tr>
<tr><td>Cable trays</td></tr>
<tr><td>Conduit / conduit bundles</td></tr>
<tr><td>ArmaProtect CT</td><td colspan="3">≥ 50</td><td>≥ 100</td><td>≥ 10</td><td>≥ 5</td><td>≥ 5</td></tr>
</table>

[1] Please see further installation detail in the ETA-22/0064

Distance requirements in mixed penetration seals for rigid wall applications (≥ 150mm) in mm

<table>
<tr><th rowspan="2"></th><th rowspan="2">Cables</th><th rowspan="2">Combustible pipes</th><th rowspan="2">Combustible pipes</th><th rowspan="2">Conduits / conduit bundles</th><th rowspan="2">Combustible pipes</th><th rowspan="2">Multi-layer pipes</th><th rowspan="2">Non-combustible pipes (with mineral wool insulation)</th><th rowspan="2">Non-combustible pipes (with FEF insulation)</th><th rowspan="2">HVAC split combinations</th><th rowspan="2">Double solar "NanoSUN²"</th><th rowspan="2">PE lines "speed pipes"</th><th rowspan="2">Hydraulic hoses "HANSA FLEX"</th><th rowspan="2">ArmaProtect CT firestop cable tube</th><th colspan="3">Seal edge</th></tr>
<tr><th>Front</th><th>Back</th><th>Side</th></tr>
<tr><td>Cables</td><td colspan="3" rowspan="3">≥ 10 (≥ 50 one above the other)</td><td>Cable Ø≤21: ≥0mm Cable Ø≥21: ≥0mm</td><td rowspan="2">≥ 50</td><td>Cable Ø≤21: ≥0mm Cable Ø≥21: ≥0mm</td><td colspan="2">≥ 35</td><td>≥ 40</td><td rowspan="8">≥ 100</td><td>≥ 25</td><td>≥ 45</td><td>≥ 65</td><td>≥ 30</td><td colspan="2">≥ 0</td></tr>
<tr><td>Cable bundles</td><td rowspan="2">≥ 100</td><td rowspan="5">≥ 100</td></tr>
<tr><td>Cable trays</td></tr>
<tr><td>Conduits / conduit bundles</td><td>Cable Ø≤21mm: ≥0 Cable Ø≥21mm: ≥100</td><td colspan="2">≥ 100</td><td>≥ 0</td><td>≥ 100</td><td colspan="2">≥ 80</td><td>≥ 100</td><td rowspan="3">≥ 100</td><td rowspan="3">≥ 100</td><td rowspan="3">≥ 100</td><td rowspan="8">≥ 0</td></tr>
<tr><td>Combustible pipes</td><td colspan="3">≥ 50</td><td rowspan="2">≥ 100</td><td>≥ 0</td><td colspan="2">≥ 0</td><td>≥ 50</td></tr>
<tr><td>Multi-layer pipes</td><td>Cable Ø≤21mm: ≥0 Cable Ø≥21mm: ≥100</td><td colspan="2">≥ 100</td><td>≥ 100</td><td>≥ 0</td><td colspan="2">≥ 100</td><td>≥ 100</td></tr>
<tr><td>Non-combustible pipes (with mineral wool insulation)</td><td colspan="3" rowspan="2">≥ 50</td><td rowspan="2">≥ 80</td><td rowspan="2">≥ 0</td><td rowspan="6">≥ 100</td><td colspan="2" rowspan="2">≥ 0</td><td rowspan="2">≥ 50</td><td rowspan="2">≥ 20</td></tr>
<tr><td>Non-combustible pipes (with FEF insulation)</td></tr>
<tr><td>HVAC split combinations</td><td colspan="3">≥ 40</td><td rowspan="5">≥ 100</td><td>≥ 50</td><td colspan="2">≥ 50</td><td>≥ 25</td><td>≥ 85</td><td rowspan="2">≥ 100</td></tr>
<tr><td>Double solar "NanoSUN²"</td><td colspan="3">≥ 100</td><td rowspan="4">≥ 100</td><td colspan="2">≥ 100</td><td>≥ 85</td><td rowspan="2">≥ 100</td><td>≥ 85</td></tr>
<tr><td>PE lines "speed pipes"</td><td colspan="3">≥ 25</td><td colspan="2">≥ 20</td><td rowspan="3">≥ 100</td><td>≥ 25</td><td rowspan="3">≥ 100</td></tr>
<tr><td>Hydraulic hoses "HANSA FLEX"</td><td colspan="3">≥ 45</td><td colspan="2" rowspan="2">≥ 100</td><td>≥ 85</td><td rowspan="2">≥ 100</td><td rowspan="2">≥ 100</td><td colspan="2">≥ 80</td></tr>
<tr><td>ArmaProtect CT firestop cable tube</td><td colspan="3">≥ 65</td><td>≥ 100</td><td>≥ 100</td><td>≥ 3</td><td colspan="2">≥ 15</td></tr>
</table>

Distance requirements in mixed penetration seals for rigid floor applications (≥ 150mm) in mm

	Cables	Combustible pipes	Combustible pipes	Conduits / conduit bundles	Combustible pipes	Multi-layer pipes	Non-combustible pipes (with mineral wool insulation)	Non-combustible pipes (with FEF insulation)	HVAC split combinations	Double solar "NanoSUN²"	PE lines "speed pipes"	Hydraulic hoses "HANSA FLEX"	ArmaProtect CT firestop cable tube	Seal edge		
														Front	Back	Side
Cables	Seal thickness ≥ 150: ≥10 (≥ 50 one above the other) Seal thickness ≥ 240: ≥0 (≥ 45 one above the other)			Cable Ø≤21: ≥0mm Cable Ø≥21: ≥0mm	≥ 50	Cable Ø≤21: ≥0mm Cable Ø≥21: ≥0mm	≥ 25				≥ 40	≥ 85	≥ 65	≥ 30	≥ 0	Seal thickness ≥ 150: ≥10 Seal thickness ≥ 200: ≥25
Cable bundles				≥ 100												
Cable trays																
Conduits / conduit bundles	Cable Ø≤21mm: ≥0 Cable Ø≥21mm: ≥100	≥ 100		≥ 0	≥ 100	≥ 100	≥ 60		≥ 100							
Combustible pipes	≥ 50				≥ 25		≥ 0									
Multi-layer pipes	Cable Ø≤21mm: ≥0 Cable Ø≥21mm: ≥100	≥ 100			≥ 100	≥ 0	≥ 100			≥ 100	≥ 100	≥ 100	≥ 100	≥ 0		
Non-combustible pipes (with mineral wool insulation)	≥ 25				≥ 0		≥ 0		≥ 60							
Non-combustible pipes (with FEF insulation)				≥ 100												
HVAC split combinations	≥ 100				≥ 100	≥ 100	≥ 60		≥ 50					≥ 100		
Double solar "NanoSUN²"							≥ 100		≥ 100			≥ 80		≥ 30		
PE lines "speed pipes"	≥ 40										≥ 25					
Hydraulic hoses "HANSA FLEX"	≥ 85									≥ 80	≥ 100	≥ 100		≥ 35		
ArmaProtect CT firestop cable tube	≥ 65									≥ 100			≥ 10	≥ 15		

Distance requirements in electrical penetration seals for rigid wall applications (≥ 240mm) and rigid floor (≥ 200mm) in mm

Distances

Distances wall / floor	Cables	Cable bundles	Cable trays	Seal edge		
				Upper	Under	Side
Cables	≥ 10mm (next to each other) ≥ 40mm (above each other)			≥ 30mm	≥ 20mm	
Cable bundles						
Cable trays						

Applications

Application in rigid wall

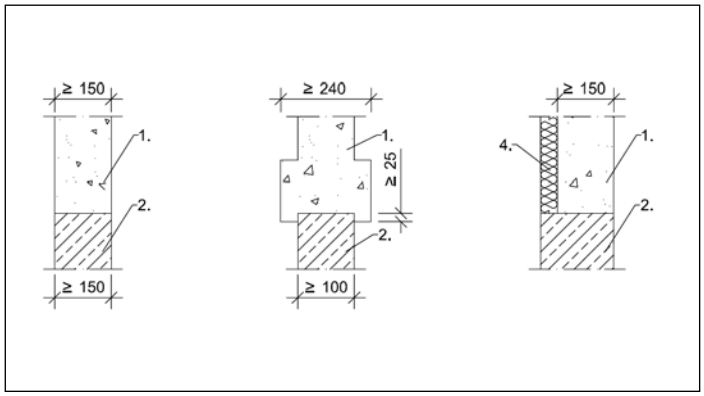

Legend

1. ArmaProtect CM
2. rigid wall ≥ 150mm
4. lost form work, eg. made of mineral wool board

Dimensions in mm

Application in rigid floor

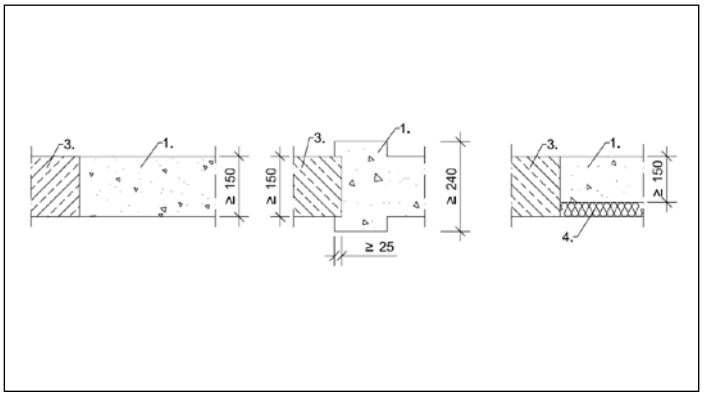

Legend

1. ArmaProtect CM
3. rigid floor ≥ 150mm
4. lost form work, eg. made of mineral wool board

Dimensions in mm

Application with cables, cable bundles and cable trays with intumescent wrap in flexible wall and rigid wall

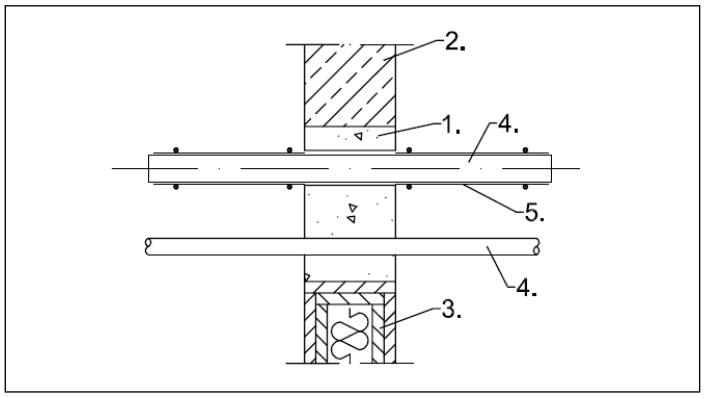

Legend

1. ArmaProtect CM ≥ 100mm
2. rigid wall ≥ 100mm
3. flexible wall ≥ 100mm
4. cable / cable bundles / cable trays
5. intumescent wrap ArmaProtect FW2

Application with conduits, conduit bundles with intumescent wrap in flexible wall and rigid wall

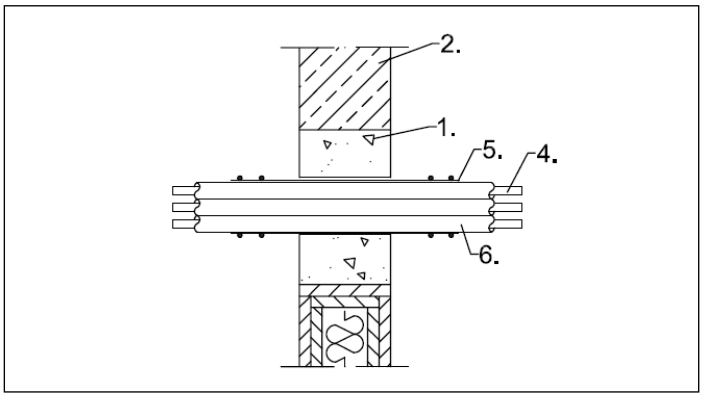

Legend

1. ArmaProtect CM ≥ 100mm
2. rigid wall ≥ 100mm
3. flexible wall ≥ 100mm
4. cable
5. intumescent wrap ArmaProtect FW2
6. Conduits made of PE-HD

Application with cables, cable bundles and cable trays in rigid wall and rigid floor

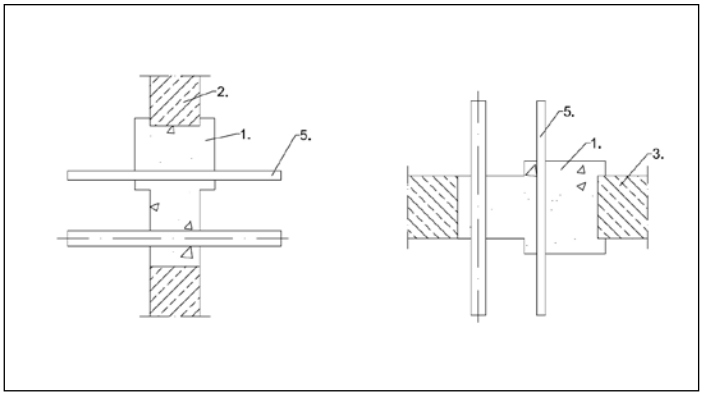

Legend
1. ArmaProtect CM ≥ 150mm
2. rigid wall ≥ 150mm
3. rigid floor ≥ 150mm
5. cables / cable bundles / cable trays

Application with cables, cable bundles and cable tray with intumescent wrap in rigid wall and rigid floor

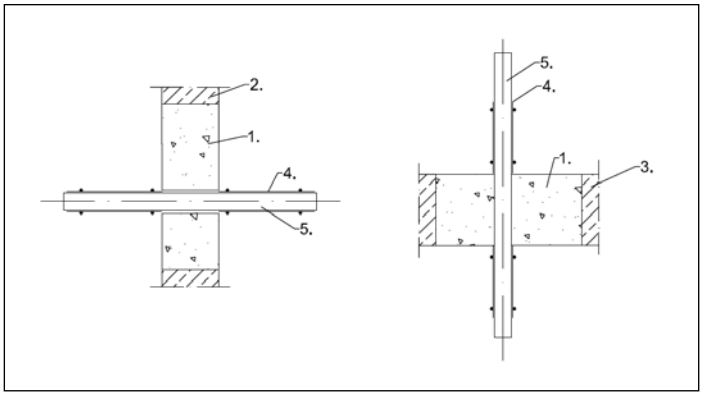

Legend
1. ArmaProtect CM ≥ 150mm
2. rigid wall ≥ 150mm
3. rigid floor ≥ 150mm
4. intumenscent wrap
5. cables / cable bundles / cable trays

Application with conduit or conduit bundles with intumescent wrap in rigid wall and rigid floor

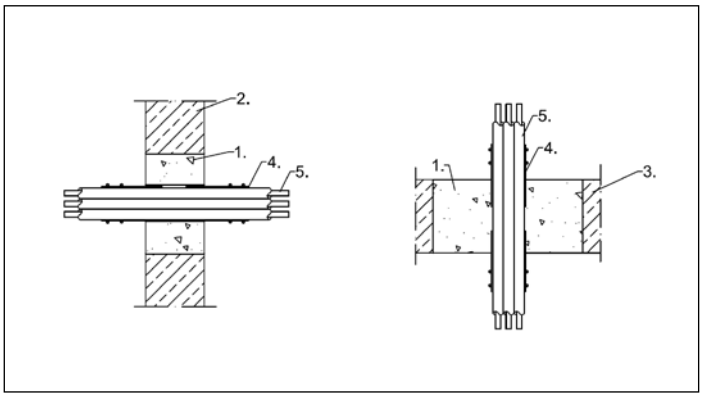

Legend
1. ArmaProtect CM ≥ 150mm
2. rigid wall ≥ 150mm
3. rigid floor ≥ 150mm
4. intumescent wrap

Application with conduit with non-combustible insulation in rigid wall and rigid floor

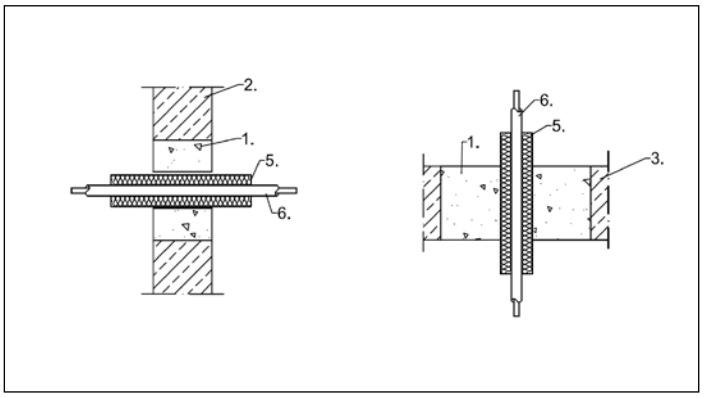

Legend
1. ArmaProtect CM ≥ 150mm
2. rigid wall ≥ 150mm
3. rigid floor ≥ 150mm
5. mineral fibre mats or shells ("lamella mat")
6. conduits made of PE-HD

Application with PE lines "speed pipes" with intumescent wrap in rigid wall and rigid floor

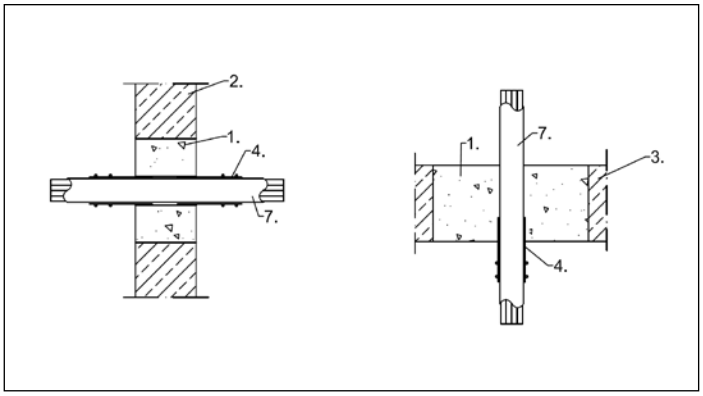

Legend

1. ArmaProtect CM ≥ 150mm
2. rigid wall ≥ 150mm
3. rigid floor ≥ 150mm
4. intumescent wrap ArmaProtect FW2
7. PE lines "speed pipes"
   (for glass fibre cables and micro cables)

Application with HVAC split line combinations "Tubolit Duo Split" with intumescent wrap in rigid wall and rigid floor

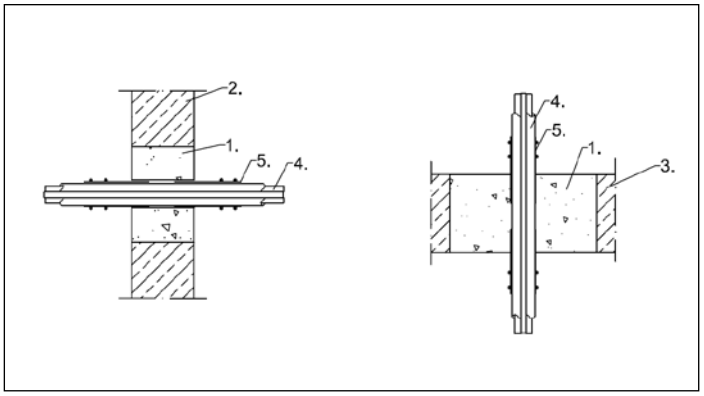

Legend

1. ArmaProtect CM ≥ 150mm
2. rigid wall ≥ 150mm
3. rigid floor ≥ 150mm
4. HVAC split line combinations
5. intumescent wrap ArmaProtect FW2

Application with non-combustible pipes with non-combustible insulation in rigid wall and rigid floor

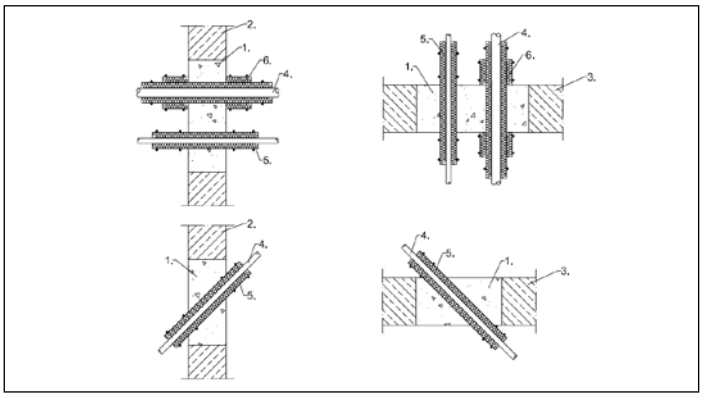

Legend

1. ArmaProtect CM ≥ 150mm
2. rigid wall ≥ 150mm
3. rigid floor ≥ 150mm
4. non-combustible pipes
5. mineral fibre mats or shells ("lamella mat")
6. additional insulation made of mineral fibre mats or shells ("lamella mat or Conlit 150U")

Application with non-combustible pipes with ArmaFlex Protect in rigid wall and rigid floor

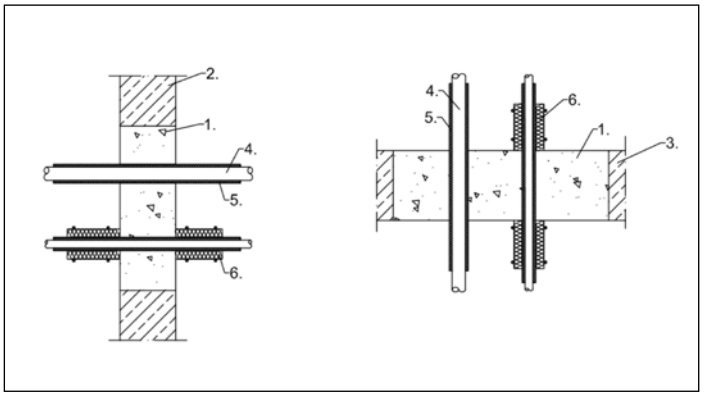

Legend

1. ArmaProtect CM ≥ 150mm
2. rigid wall ≥ 150mm
3. rigid floor ≥ 150mm
4. non-combustible pipe
5. ArmaFlex Protect
6. protective insulation made of mineral fibre mats / -shells

Application with non-combustible pipes with combustible insulation and intumescent wrap in rigid wall and rigid floor

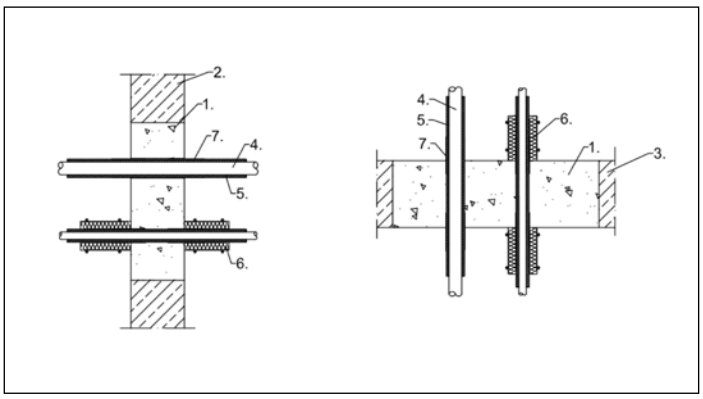

Legend
1. ArmaProtect CM ≥ 150mm
2. rigid wall ≥ 150mm
3. rigid floor ≥ 150mm
4. non-combustible pipe
5. FEF insulation
6. protective insulation made of mineral fibre mats / -shells
7. intumescent wrap ArmaProtect FW2

Application with double solar pipes "NanoSUN²" with intumescent wrap in rigid wall and rigid floor

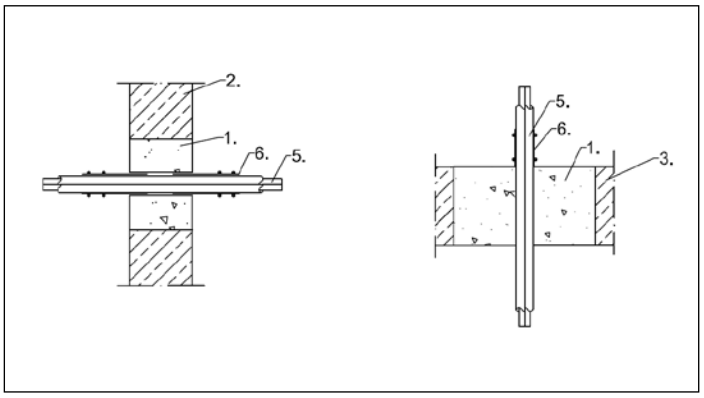

Legend
1. ArmaProtect CM ≥ 150mm
2. rigid wall ≥ 150mm
3. rigid floor ≥ 150mm
5. double solar pipes ("NanoSUN²")
6. intumescent wrap ArmaProtect FW2

Application with combustible pipes with intumescent wrap in rigid wall and rigid floor

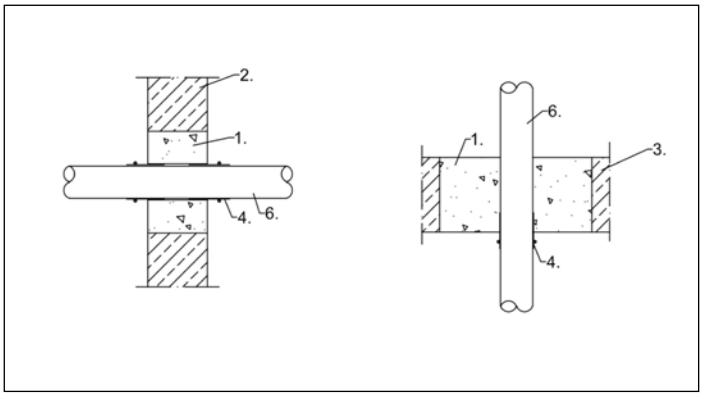

Legend
1. ArmaProtect CM ≥ 150mm
2. rigid wall ≥ 150mm
3. rigid floor ≥ 150mm
4. intumescent wrap ArmaProtect FW1
6. combustible pipe

Application with combustible pipes with firestop collar in rigid wall and rigid floor

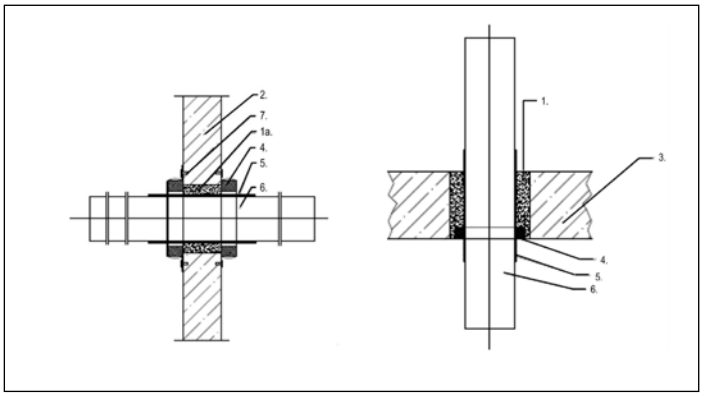

Legend
1. ArmaProtect CM ≥ 150mm
2. rigid wall ≥ 150mm
3. rigid floor ≥ 150mm
4. firestop collar ArmaProtect FC2
5. PE-foam acoustic insulation
6. combustible pipe
7. fastening

Application with "HANSA FLEX" with lamella mat and intumescent wrap in rigid wall and rigid floor

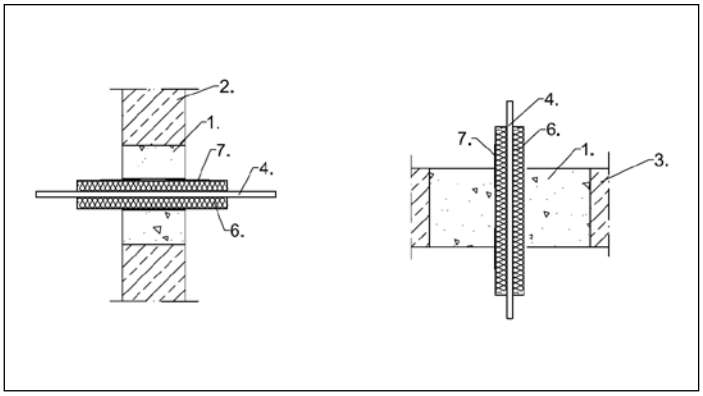

Legend

1. ArmaProtect CM ≥ 150mm
2. rigid wall ≥ 150mm
3. rigid floor ≥ 150mm
4. "HANSA FLEX" hydraulic hoses with wire mesh insert
6. mineral fibre mats or shells ("lamella mat")
7. intumescent wrap ArmaProtect FW2

Application with ArmaProtect CT cable tube in rigid wall

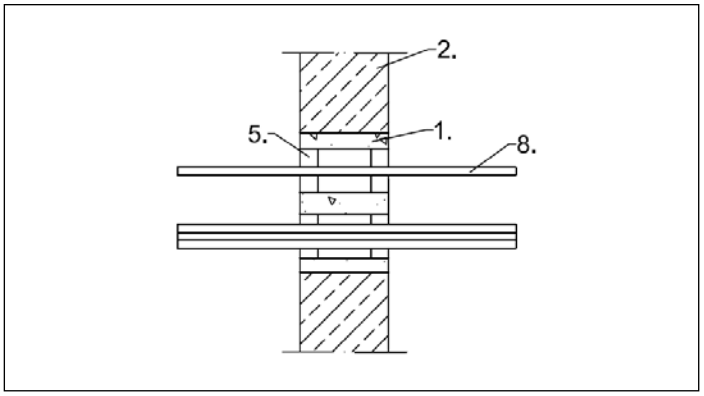

Legend

1. ArmaProtect CM
2. rigid wall ≥ 150mm
5. ArmaProtect CT cable tube
8. cables / cable bundles

Application rigid wall and rigid floor

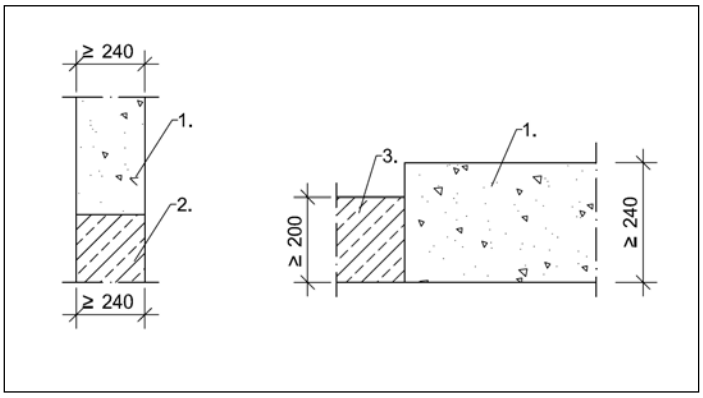

Legend

1. ArmaProtect CM ≥ 240mm
2. rigid wall ≥ 240mm
3. rigid floor ≥ 200mm

Dimensions in mm

Application with cables, cable bundles and cable trays with intumescent wrap in rigid wall and rigid floor

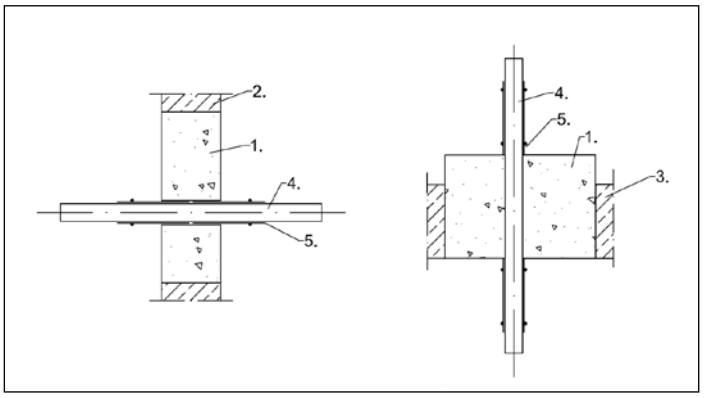

Legend

1. ArmaProtect CM ≥ 240mm
2. rigid wall ≥ 240mm
3. rigid floor ≥ 200mm
4. cables / cable bundles / cable trays
5. intumescent wrap ArmaProtect FW2

Resistance to fire and installation details[1]

Wall applications

Applications with electrical installations in flexible and rigid wall ⩾ 100mm

Type	Seal thickness (mm)	Measures	Base material	Base material thickness (mm)	Classification
Cables Ø ⩽ 21 mm in ArmaProtect CT	⩾ 100	-	flexible wall & rigid wall	⩾ 100	EI 90
Cable bundles Ø ⩽ 60 mm with cables Ø 21 mm in ArmaProtect CT					
Conduits Ø ⩽ 16 mm in ArmaProtect CT					
ArmaProtect CT (length ⩾ 150 mm)					
Cables Ø ⩽ 50 mm		2x2 layers ArmaProtect FW2 (outside, wrap width = 125mm)			EI 90 (E 120)
Cables Ø ⩽ 80 mm					
Cable bundles Ø ⩽ 150 mm with cables Ø ⩽ 21 mm					EI 120
Conduits Ø ⩽ 32mm		2x2 layers ArmaProtect FW2 (50mm inside, 75mm outside, wrap width = 125mm)			
Conduit bundles Ø ⩽ 100mm with conduits Ø ⩽ 32mm					

Applications in rigid wall ⩾ 150mm

Type	Seal thickness (mm)	Measures	Base material	Base material thickness (mm)	Classification
Cables, cable bundles and cable trays					
Cables Ø ⩽ 32mm	⩾ 150	-	rigid wall	⩾ 150	EI 120
Single-core-non-sheathed cables (wire, Ø ⩽ 24mm)					
Cable bundles Ø ⩽ 60mm					
Cable bundles Ø ⩽ 100mm					EI 90 (E 120)
Cables Ø ⩽ 50mm	⩾ 240				EI 120
Cables Ø ⩽ 80mm					EI 90 (E 120)
Cable bundles Ø ⩽ 100mm					EI 120
Cables Ø ⩽ 50mm	⩾ 150	2x2 layers ArmaProtect FW2 + 45 - 60 mm overlapping (outside, wrap width = 125mm)			EI 90 (E 120)
Cables Ø ⩽ 80mm		2x2 layers ArmaProtect FW2 + 45 - 60 mm overlapping (outside, wrap width = 150mm)			EI 120
Cable bundles Ø ⩽ 100mm		2x1 layer ArmaProtect FW2 + 45 - 60 mm overlapping (outside, wrap width = 125mm)			

Applications in rigid wall ≥ 150mm (contd.)

Type	Seal thickness (mm)	Measures	Base material	Base material thickness (mm)	Classification
Conduits and conduit bundles					
Conduits Ø ≤ 32mm	≥ 150	2x1 layer ArmaProtect FW2 (50 mm inside, 75 mm outside, wrap width = 125mm)	rigid wall	≥ 150	EI 120-U/U
Conduits Ø ≤ 63mm		2x2 layers ArmaProtect FW2 (50 mm inside, 75 mm outside, wrap width = 125mm)			
Conduits Ø ≤ 100mm		2x3 layers ArmaProtect FW2 (50 mm inside, 75 mm outside, wrap width = 125mm) + lamella mat ≥ 500mm x ≥ 30mm			
Conduit bundles Ø ≤ 100mm with conduits Ø ≤ 32mm		2x2 layers ArmaProtect FW2 (50 mm inside, 75 mm outside, wrap width = 125mm)			
Conduits Ø ≤ 63mm		lamella mat ≥ 500mm x ≥ 30mm			
PE lines ("speed pipes" - single "speed pipes" or "speed pipe" bundles, with and without glass fibre or micro cables)					
max. 24 pcs., Ø ≤ 7mm	≥ 150	2x1 layer ArmaProtect FW2 (50 mm inside, 75 mm outside, wrap width = 125mm)	rigid wall	≥ 150	EI 120-U/U
max. 7 pcs., Ø ≤ 10mm					
max. 5 pcs., Ø ≤ 12mm					
HVAC split line combinations combined lines for split HVAC units with twin or single copper pipe and pipe insulation 9mm thick, made from PE foam, in accordance with EN 14313; optionally with additional cable/pipe without spacing					
Pipe 1/pipe 2 (Ø = 6mm - 10mm/ 10mm - 18mm) + PE-100 (Ø ≤ 25mm, t 1,9 – 3,5mm)	≥ 150	2x2 layers ArmaProtect FW2 (50mm inside, 75mm outside, wrap width = 125mm)	rigid wall	≥ 150	EI 120
Steel, stainless steel or cast-iron steel pipes with non-combustible insulation					
Copper pipes Ø ≤ 15mm	≥ 150	lamella mat ≥250mm x ≥ 20mm	rigid wall	≥ 150	EI 120-C/U
Copper pipes Ø ≤ 28mm		lamella mat ≥ 500mm x ≥ 20mm			
Copper pipes Ø ≤ 42mm		lamella mat ≥ 500mm x ≥ 30mm			
Copper pipes Ø ≤ 54mm		lamella mat ≥ 500mm x ≥ 40mm			
Copper pipes Ø ≤ 88,9mm		lamella mat ≥ 750mm x ≥ 60mm			
Steel, stainless steel or cast-iron steel pipes with non-combustible insulation					
Steel pipes Ø ≤ 15mm	≥ 150	lamella mat ≥ 250mm x ≥ 20mm	rigid wall	≥ 150	EI 120-C/U
Steel pipes Ø ≤ 28mm		lamella mat ≥ 500mm x ≥ 20mm			
Steel pipes Ø ≤ 42mm		lamella mat ≥ 500mm x ≥ 30mm			
Steel pipes Ø ≤ 114,3mm		lamella mat ≥ 500mm x ≥ 40mm			
Steel pipes Ø ≤ 168,3mm		lamella mat ≥ 1000mm x ≥ 40mm			
Steel pipes Ø ≤ 323,9mm		lamella mat ≥ 1000mm x ≥ 40mm + lamella mat ≥ 500mm x ≥ 30mm			

Applications in rigid wall ≥ 150mm (contd.)

Type	Seal thickness (mm)	Measures	Base material	Base material thickness (mm)	Classification
Non-combustible pipes made of copper with non-combustible insulation "Conlit 150U"					
Copper pipes Ø ≤ 15mm	≥ 150	Conlit 150 U ≥ 250mm x ≥ 22,5mm	rigid wall	≥ 150	EI 120 C/U
Copper pipes Ø ≤ 28mm		Conlit 150 U ≥ 500mm x ≥ 26mm			
Copper pipes Ø ≤ 54mm		Conlit 150 U ≥ 500mm x ≥ 38mm			
Copper pipes Ø ≤ 108mm		Conlit 150 U ≥ 1000mm x ≥ 36mm			
Non-combustible pipes made of steel with non-combustible insulation "Conlit 150U"					
Steel pipes Ø ≤ 15mm	≥ 150	Conlit 150 U ≥ 250mm x ≥ 22,5mm	rigid wall	≥ 150	EI 120 C/U
Steel pipes Ø ≤ 28mm		Conlit 150 U ≥ 500mm x ≥ 26mm			
Steel pipes Ø ≤ 114,3 mm		Conlit 150 U ≥ 750mm x ≥ 33mm			
Steel pipes Ø ≤ 219,1mm		Conlit 150 U ≥ 1000mm x ≥ 40mm + lamella mat ≥ 500mm x ≥ 40mm			
Steel pipes Ø ≤ 323,9mm					
Non-combustible pipes made of copper with combustible insulation "ArmaFlex Protect"					
Copper pipes Ø ≤ 28mm	≥ 150	ArmaFlex Protect ≥ 250mm x ≥ 25mm	rigid wall	≥ 150	EI 120 C/U
		ArmaFlex Protect ≥ 500mm x ≥ 26 - 51mm			
Copper pipes Ø ≤ 88,9mm		ArmaFlex Protect ≥ 500 mm x ≥ 25mm			
		ArmaFlex Protect ≥ 1000 mm x ≥ 26mm			
Copper pipes Ø ≤ 108mm		ArmaFlex Protect ≥ 1000 mm x ≥ 52mm + lamella mat ≥ 500mm x ≥ 40mm			
Non-combustible pipes made of steel, stainless steel or cast iron with combustible insulation "ArmaFlex Protect"					
Steel pipes Ø ≤ 28mm	≥ 150	ArmaFlex Protect ≥ 250mm x ≥ 25mm	rigid wall	≥ 150	EI 120 C/U
		ArmaFlex Protect ≥ 500mm x ≥ 26 - 51mm			
Steel pipes Ø ≤ 88,9mm		ArmaFlex Protect ≥ 500 mm x ≥ 25mm			
		ArmaFlex Protect ≥ 1000 mm x ≥ 26 - 51mm			
Steel pipes Ø ≤ 170mm		ArmaFlex Protect ≥ 1000 mm x ≥ 52mm			
		ArmaFlex Protect ≥ 1000 mm x ≥ 26 – 52mm + lamella mat ≥ 500mm x ≥ 40mm			

Applications in rigid wall ≥ 150mm (contd.)

Type	Seal thickness (mm)	Measures	Base material	Base material thickness (mm)	Classification
Non-combustible pipes made of copper with combustible FEF insulation acc. to EN 14304, e.g. "NH/Armaflex"					
Copper pipes Ø ≤ 54mm	≥ 150	2 x 2-layers ArmaProtect FW2 (50 mm inside, 75 mm outside, wrap width = 125mm)	rigid wall	≥ 150	EI 120 C/U
Copper pipes Ø ≤ 88,9mm		2 x 2-layers ArmaProtect FW2 (50 mm inside, 75 mm outside, wrap width = 125mm) + lamella mat ≥ 500mm x ≥ 40mm			
Copper pipes Ø ≤ 108mm		2 x 2-layers ArmaProtect FW2 (50 mm inside, 75 mm outside, wrap width = 125mm) + lamella mat ≥ 750mm x ≥ 40mm			
Non-combustible pipes made of steel, stainless steel or cast iron with combustible FEF insulation acc. to EN 14304, e.g. "NH/Armaflex"					
Steel pipes Ø ≤ 168,3mm	≥ 150	2 x 2-layers ArmaProtect FW2 (50 mm inside, 75 mm outside, wrap width = 125mm) + lamella mat ≥ 500mm x ≥ 40mm	rigid wall	≥ 150	EI 120 C/U

Applications in rigid wall ≥ 150mm (contd.)

Type	Seal thickness (mm)	Measures	Base material	Base material thickness (mm)	Classification
Double solar pipes NanoSUN²					
DN 16 and DN 25	≥ 150	2x1 layer ArmaProtect FW2 + ≥40mm overlapping (outside, wrap width = 125mm)	rigid wall	≥ 150	EI 120-C/U
Multi-layer composite pipes HENCO pipes with non-combustible insulation					
Ø ≤ 12mm x 1,6mm	≥ 150	lamella mat ≥ 250mm x ≥ 20mm	rigid wall	≥ 150	EI 120-U/C
Ø ≤ 32mm x 3,0mm					
Ø ≤ 63mm x 4,5mm		lamella mat ≥ 2500mm x ≥ 30mm			
Multi-layer composite pipes HENCO pipes with PE-foam (PEF) insulation					
Ø ≤ 14mm x 2,0mm (PEF insulation, 6mm)	≥ 150	2x1 layer ArmaProtect FW1 (50mm inside, 50mm outside, wrap width = 100mm) + lamella mat ≥ 250mm x ≥ 20mm	rigid wall	≥ 150	EI 120-U/C
Ø ≤ 26mm x 3,0mm (PEF insulation, 6 -13mm)					
Ø ≤ 32mm x 2,0mm (PEF insulation, 6 – 10mm)					
Combustible pipes with/without 5mm PE-foam acoustic insulation made of PVC-U, PVC-C, PP-H or PE-100					
Ø ≤ 50mm (with/without PEF insulation, 5mm)	≥ 150	2x1 layer ArmaProtect FW1 (70mm inside, 30mm outside, wrap width = 100mm)	rigid wall	≥ 150	EI 120-U/U
Ø ≤ 80mm (with/without PEF insulation, 5mm)		2x2 layers ArmaProtect FW1 (70mm inside, 30mm outside, wrap width = 100mm)			
Ø ≤ 110mm (with/without PEF insulation, 5mm)		2x3 layers ArmaProtect FW1 (70mm inside, 30mm outside, wrap width = 100mm)			
Ø ≤ 135mm (with/without PEF insulation, 5mm)		2x4 layers ArmaProtect FW1 (70mm inside, 30mm outside, wrap width = 100mm)			EI 120-U/C
Ø ≤ 160mm (with/without PEF insulation, 5mm)		2x5 layers ArmaProtect FW1 (70mm inside, 30mm outside, wrap width = 100mm)			
Combustible pipes with/without 5mm PE-foam acoustic insulation made of PVC-U					
Ø ≤ 160mm (with/without PE insulation, 5mm)	≥ 150	2x1 firestop collar ArmaProtect FC2	rigid wall	≥ 150	EI 120 U/U
Combustible pipes with/without 5mm PE-foam acoustic insulation made of PE-HD					
Ø ≤ 110mm (with/without PE insulation, 5mm)	≥ 150	2x1 firestop collar ArmaProtect FC2	rigid wall	≥ 150	EI 120-U/U
Ø ≤ 160mm (with/without PE insulation, 5mm)					EI 90-U/U

Applications in rigid wall ≥ 150mm (contd.)

Type	Seal thickness (mm)	Measures	Base material	Base material thickness (mm)	Classification
Combustible pipes with/without 5mm PE-foam acoustic insulation made of PP-H					
Ø ≤ 110mm (with/without PE insulation, 5mm)	≥ 150	2x1 firestop collar ArmaProtect FC2	rigid wall	≥ 150	EI 120-U/U
Ø ≤ 160mm (with/without PE insulation, 5mm)					EI 90-U/U
Combustible pipes (type Conel Drain, Rehau Raupiano light) with/without 5mm PE-foam acoustic insulation					
Ø ≤ 110mm (with/without PE insulation, 5mm)	≥ 150	2x1 firestop collar ArmaProtect FC2	rigid wall	≥ 150	EI 120-U/U
Combustible pipes (type Georg Fischer Silenta Premium) with/without 5mm PE-foam acoustic insulation					
Ø ≤ 160mm (with/without PE insulation, 5mm)	≥ 150	2x1 firestop collar ArmaProtect FC2	rigid wall	≥ 150	EI 120-U/U
Combustible pipes (type Geberit Silent dB20) with/without 5mm PE-foam acoustic insulation					
Ø ≤ 110mm (with/without PE insulation, 5mm)	≥ 150	2x1 firestop collar ArmaProtect FC2	rigid wall	≥ 150	EI 120-U/U
Ø ≤ 160mm (with/without PE insulation, 5mm)					EI 90-U/U
Combustible pipes (type Geberit Silent Pro) with/without 5mm PE-foam acoustic insulation					
Ø ≤ 160mm (with/without PE insulation, 5mm)	≥ 150	2x1 firestop collar ArmaProtect FC2	rigid wall	≥ 150	EI 120-U/U
Combustible pipes (type POLO-KAL NG) with/without 5mm PE-foam acoustic insulation					
Ø ≤ 110mm (with/without PE insulation, 5mm)	≥ 150	2x1 firestop collar ArmaProtect FC2	rigid wall	≥ 150	EI 120-U/U
Combustible pipes (type POLO-KAL XS) with/without 5mm PE-foam acoustic insulation					
Ø ≤ 110mm (with/without PE insulation, 5mm)	≥ 150	2x1 firestop collar ArmaProtect FC2	rigid wall	≥ 150	EI 120-U/U
Combustible pipes (type Rehau Raupino Plus, Pipelife Master 3 Plus, KeKelit Phonex AS, Wavin AS) with/without 5mm PE-foam acoustic insulation					
Ø ≤ 50mm (with/without PE insulation, 5mm)	≥ 150	2x1 firestop collar ArmaProtect FC2	rigid wall	≥ 150	EI 120-U/U
Combustible pipes (type Wavin SITECH+) with/without 5mm PE-foam acoustic insulation					
Ø ≤ 160mm (with/without PE insulation, 5mm)	≥ 150	2x1 firestop collar ArmaProtect FC2	rigid wall	≥ 150	EI 120-U/U
Combustible pipes (type Valsir TriPlus) with/without 5mm PE-foam acoustic insulation					
Ø ≤ 160mm (with/without PE insulation, 5mm)	≥ 150	2x1 firestop collar ArmaProtect FC2	rigid wall	≥ 150	EI 120-U/U
Hydraulic hoses "HANSA FLEX" (also with wire braid reinforcement)					
Ø ≤ 55.9mm (Hansa-Flex HD 200 (2SN), e.g. hydraulic hoses for elevators) with additional cables	≥ 150	2x1 layer ArmaProtect FW2 (50mm inside, 75mm outside, wrap width = 125mm) + lamella mat ≥ 250mm x ≥ 20mm	rigid wall	≥ 150	EI 120

Applications with ArmaProtect CT firestop cable tube (installation length 200 mm, type M) in rigid wall ≥ 150mm

Type	Base material	Base material thickness (mm)	Additional measures	Classification
Cables and cable bundles				
Cables Ø ≤ 21 mm	flexible & rigid wall	≥ 150	-	EI 120
Cable bundles Ø ≤ 100 %, with cables Ø ≤ 21 mm			1 x 1-layer ArmaProtect FW2 (above or below, outside, wrap width = 125mm)	
Conduits and conduit bundles				
Conduits Ø ≤ 40 mm, with/without cable Ø ≤ 21 mm	flexible & rigid wall	≥ 150	-	EI 120-U/U
Conduit bundles, with or without configuration, Ø ≤ 90 mm with conduits Ø ≤ 40 mm, with/without cables Ø ≤ 21 mm				
Conduit bundles Ø ≤ 100 % with conduits Ø ≤ 32 mm, with/without cables Ø ≤ 21 mm				
HVAC split line combinations combined lines for split HVAC units with twin or single copper pipe and pipe insulation 9mm thick, made from PE foam, in accordance with EN 14313; optionally with additional cable/pipe without spacing				
Combined lines for split HVAC-units pipe 1/pipe 2 (Ø = 6mm - 10mm/ 10mm - 18mm) with 9mm insulation made of PE-foam + plastic pipe PVC-U (Ø ≤ 25mm x 1.5mm) + max. 3 cables (Ø ≤ 14mm) without spacing	flexible & rigid wall	≥ 150	-	EI 90-U/U
PE lines ("speed pipes" - single "speed pipes" or "speed pipe" bundles, with and without glass fibre or micro cables)				
7 mm ≤ Ø ≤ 14 mm, bundle ≤ 100 %	flexible & rigid wall	≥ 150	-	EI 120-U/U

Applications with ArmaProtect CT firestop cable tube (installation length 300 mm, type L) in rigid wall ≥ 150mm

Type	Base material	Base material thickness (mm)	Additional measures	Classification
Cables and cable bundles				
Cables Ø ≤ 21 mm	flexible & rigid wall	≥ 150	-	EI 120
Cables Ø ≤ 50 mm				EI 90 (E 120)
Cables Ø ≤ 80 mm	rigid wall			
Cable bundles Ø ≤ 100 %, with cables Ø ≤ 21 mm	flexible & rigid wall		1 x 1-layer ArmaProtect FW2 (above or below, outside, wrap width = 125mm)	

Applications with ArmaProtect CT firestop cable tube (installation length 300 mm, type L) in rigid wall ≥ 150mm (contd.)

Type	Base material	Base material thickness (mm)	Additional measures	Classification
Wave guides				
CommScope HELIAX LDF (low density foam) ≤ 16,002 mm	flexible & rigid wall	≥ 150	-	EI 120-U/C
CommScope 50Ω braided CNT≤ 15 mm				
CommScope HELIAX AVA ≤ 28 mm				EI 90-U/C (E 120-U/C)
CommScope HELIAX FSJ (super flexible) ≤ 13, mm				
RFS RADIAFLEX RLK ≤ 28,5 mm				EI 120-U/C
RFS CELLFLEX LCF ≤ 27,8 mm				
Conduits and conduit bundles				
Conduits Ø ≤ 40 mm, with/ without cable Ø ≤ 21 mm	flexible & rigid wall	≥ 150	-	EI 120-U/U
Conduit bundles, with or without configuration, Ø ≤ 90 mm with conduits Ø ≤ 40 mm, with/without cables Ø ≤ 21 mm				
Conduit bundles Ø ≤ 100 % with conduits Ø ≤ 32 mm, with/without cables Ø ≤ 21 mm				
HVAC split line combinations combined lines for split HVAC units with twin or single copper pipe and pipe insulation 9mm thick, made from PE foam, in accordance with EN 14313; optionally with additional cable/pipe without spacing				
Combined lines for split HVAC-units pipe 1/pipe 2 (Ø = 6mm - 10mm/ 10mm - 18mm) with 9mm insulation made of PE-foam + plastic pipe PVC-U (Ø ≤ 25mm x 1.5mm) + max. 3 cables (Ø ≤ 14mm) without spacing	flexible & rigid wall	≥ 150	-	EI 90-U/U
PE lines ("speed pipes" - single "speed pipes" or "speed pipe" bundles, with and without glass fibre or micro cables)				
7 mm ≤ Ø ≤ 14 mm, bundle ≤ 100 %	flexible & rigid wall	≥ 150	-	EI 120-U/U
Combustible pipes made of PVC-U				
Ø = 20 mm x 1,5 mm - 3 mm x s 2,4 mm	flexible & rigid wall	≥ 150	-	EI 120-U/U

Applications with cables, cable bundles and cable trays in rigid wall ≥ 240mm

Type	Seal thickness (mm)	Measures	Base material	Base material thickness (mm)	Classification
Cables Ø ≤ 80mm	≥ 240	2x2 layers ArmaProtect FW2 (outside, wrap width = 500mm)	rigid wall	≥ 240	EI 240
Cable bundles Ø ≤ 100mm with cables Ø ≤ 21mm					

Floor applications

Applications in rigid floor ⩾ 150mm

Type	Seal thickness (mm)	Measures	Base material	Base material thickness (mm)	Classification
Conduits and conduit bundles					
Cables Ø ⩽ 32mm	⩾ 150	-	rigid floor	⩾ 150	EI 120
Single-core-non-sheathed cables (wire, Ø ⩽ 24mm)					
Cable bundles Ø ⩽ 60mm					
Cable bundles Ø ⩽ 100mm					EI 60 (E 120)
Cables Ø ⩽ 50mm	⩾ 240				EI 90 (E 120)
Cables Ø ⩽ 80mm					
Cable bundles Ø ⩽ 100mm					EI 120
Cables Ø ⩽ 50mm	⩾ 150	2x2 layers ArmaProtect FW2 +45 - 60 mm overlapping (outside, wrap width = 125mm)			
Cables Ø ⩽ 80mm		2x2 layers ArmaProtect FW2 +45 - 60 mm overlapping (outside, wrap width = 150mm)			
Cable bundles Ø ⩽ 100mm		2x1 layer ArmaProtect FW2 +45 - 60 mm overlapping (outside, wrap width = 125mm)			
Conduits and conduit bundles					
Conduits Ø ⩽ 32mm	⩾ 150	2x1 layer ArmaProtect FW2 (50 mm inside, 75 mm outside, wrap width = 125mm)	rigid floor	⩾ 150	EI 120-U/U
Conduits Ø ⩽ 63mm		2x1 layer ArmaProtect FW2 (50 mm inside, 75 mm outside, wrap width = 125mm)			
Conduits Ø ⩽ 100mm		2x3 layers ArmaProtect FW2 (50 mm inside, 75 mm outside, wrap width = 125mm) + lamella mat ⩾ 500mm x ⩾ 30mm			
Conduit bundles Ø ⩽ 100mm with conduits Ø ⩽ 32mm		2x2 layers ArmaProtect FW2 (50 mm inside, 75 mm outside, wrap width = 125mm)			
Conduits Ø ⩽ 63mm		lamella mat ⩾ 500mm x ⩾ 30mm			
PE lines ("Speed pipes" - single "speed pipes" or "speed pipe" bundles, with and without glass fibre or micro cables)					
max. 24 pcs., Ø ⩽ 7mm	⩾ 150	1x2 layers ArmaProtect FW2 (below, 50 mm inside, 75 mm outside, wrap width = 125mm)	rigid floor	⩾ 150	EI 120-U/U
max. 7 pcs., Ø ⩽ 10mm					
max. 5 pcs., Ø ⩽ 12mm					

Applications in rigid floor ≥ 150mm (contd.)

Type	Seal thickness (mm)	Measures	Base material	Base material thickness (mm)	Classification
HVAC split line combinations combined lines for split HVAC-units with twin or single copper pipe and pipe insulation 9mm thick, made from PE foam, in accordance with EN 14313; optionally with additional cable/pipe without spacing					
Pipe 1 / pipe 2 (Ø = 6mm - 10mm/ 10mm - 18mm) + PE-100 (Ø ≤ 25mm, t 1,9 – 3,5mm)	≥ 150	2x2 layers ArmaProtect FW2 (50mm inside, 75mm outside, wrap width = 125mm)	rigid floor	≥ 150	EI 120
Copper pipes with non-combustible insulation					
Copper pipes Ø ≤ 15mm	≥ 150	lamella mat ≥ 250mm x ≥ 20mm	rigid floor	≥ 150	EI 120-C/U
Copper pipes Ø ≤ 28mm		lamella mat ≥ 500mm x ≥ 20mm			
Copper pipes Ø ≤ 42mm		lamella mat ≥ 500mm x ≥ 30mm			
Copper pipes Ø ≤ 54mm		lamella mat ≥ 500mm x ≥ 40mm			
Copper pipes Ø ≤ 88,9mm		lamella mat ≥ 750mm x ≥ 60mm			
Steel, stainless steel or cast-iron steel pipes with non-combustible insulation					
Steel pipes Ø ≤ 15mm	≥ 150	lamella mat ≥ 250mm x ≥ 20mm	rigid floor	≥ 150	EI 120-C/U
Steel pipes Ø ≤ 28mm		lamella mat ≥ 500mm x ≥ 20mm			
Steel pipes Ø ≤ 42mm		lamella mat ≥ 500mm x ≥ 30mm			
Steel pipes Ø ≤ 114,3mm		lamella mat ≥ 500mm x ≥ 40mm			
Steel pipes Ø ≤ 168,3mm		lamella mat ≥ 1000mm x ≥ 40mm			
Steel pipes Ø ≤ 323,9mm		lamella mat ≥ 1000mm x ≥ 40mm + lamella mat ≥ 500mm x ≥ 30mm			
Non-combustible pipes made of copper with non-combustible insulation "Conlit 150U"					
Copper pipes Ø ≤ 15mm	≥ 150	Conlit 150 U ≥ 250mm x ≥ 22,5mm	rigid floor	≥ 150	EI 120 C/U
Copper pipes Ø ≤ 42mm		Conlit 150 U ≥ 500mm x ≥ 19mm			
Copper pipes Ø ≤ 54mm		Conlit 150 U ≥ 500mm x ≥ 38mm			
Copper pipes Ø ≤ 108mm		Conlit 150 U ≥ 1000mm x ≥ 36mm			
Non-combustible pipes made of steel with non-combustible insulation "Conlit 150U"					
Steel pipes Ø ≤ 15mm	≥ 150	Conlit 150 U ≥ 750mm x ≥ 33mm	rigid floor	≥ 150	EI 120 C/U
Steel pipes Ø ≤ 28mm		Conlit 150 U≥ 500mm x ≥ 26mm			
Steel pipes Ø ≤ 42mm		Conlit 150 U≥ 500mm x ≥ 19mm			
Steel pipes Ø ≤ 54mm		Conlit 150 U≥ 500mm x ≥ 38mm			
Steel pipes Ø ≤ 114,3 mm		Conlit 150 U ≥ 750mm x ≥ 33mm			
Steel pipes Ø ≤ 219,1mm		Conlit 150 U ≥ 1000mm x ≥ 40mm + lamella mat ≥ 500mm x ≥ 40mm			
Steel pipes Ø ≤ 323,9mm					

Applications in rigid floor ≥ 150mm (contd.)

Type	Seal thickness (mm)	Measures	Base material	Base material thickness (mm)	Classification
Non-combustible pipes made of copper with combustible insulation "ArmaFlex Protect"					
Copper pipes Ø ≤ 28mm	≥ 150	ArmaFlex Protect ≥ 250mm x ≥ 25mm	rigid floor	≥ 150	EI 120 C/U
		ArmaFlex Protect ≥ 500mm x ≥ 26 - 51mm			
Copper pipes Ø ≤ 88,9mm		ArmaFlex Protect ≥ 500 mm x ≥ 25mm			
		ArmaFlex Protect ≥ 1000 mm x ≥ 26mm			
Copper pipes Ø ≤ 108mm		ArmaFlex Protect ≥ 1000 mm x ≥ 26 – 52mm + lamella mat ≥ 500mm x ≥ 40mm			
Non-combustible pipes made of steel, stainless steel or cast iron with combustible insulation "ArmaFlex Protect"					
Steel pipes Ø ≤ 28mm	≥ 150	ArmaFlex Protect ≥ 250mm x ≥ 25mm	rigid floor	≥ 150	EI 120 C/U
		ArmaFlex Protect ≥ 500mm x ≥ 26 - 51mm			
Steel pipes Ø ≤ 88,9mm		ArmaFlex Protect ≥ 500 mm x ≥ 25mm			
		ArmaFlex Protect ≥ 1000 mm x ≥ 26 - 51mm			
Steel pipes Ø ≤ 170mm		ArmaFlex Protect ≥ 1000 mm x ≥ 26 – 52mm + lamella mat ≥ 500mm x ≥ 40mm			
Non-combustible pipes made of copper with combustible FEF insulation acc. to EN 14304, e.g. "NH/Armaflex"					
Copper pipes Ø ≤ 76mm	≥ 150	2 x 2-layers ArmaProtect FW2 (50 mm inside, 75 mm outside, wrap width = 125mm)	rigid floor	≥ 150	EI 120 C/U
Copper pipes Ø ≤ 88,9mm		2 x 2-layers ArmaProtect FW2 (50 mm inside, 75 mm outside, wrap width = 125mm) + lamella mat ≥ 500mm x ≥ 40mm			
Copper pipes Ø ≤ 108mm		2 x 2-layers ArmaProtect FW2 (50 mm inside, 75 mm outside, wrap width = 125mm) + lamella mat ≥ 750mm x ≥ 40mm			
Non-combustible pipes made of steel, stainless steel or cast iron with combustible FEF insulation acc. to EN 14304, e.g. "NH/Armaflex"					
Steel pipes Ø ≤ 168,3mm	≥ 150	2 x 2-layers ArmaProtect FW2 (50 mm inside, 75 mm outside, wrap width = 125mm) + lamella mat ≥ 500mm x ≥ 40mm	rigid wall	≥ 150	EI 120 C/U

Applications in rigid floor ≥ 150mm (contd.)

Type	Seal thickness (mm)	Measures	Base material	Base material thickness (mm)	Classification
Double solar pipes "NanoSUN²"					
DN 16 and DN 25	≥ 150	1x1 layer ArmaProtect FW2 + ≥40mm overlapping (above, outside, wrap width = 125mm)	rigid floor	≥ 150	EI 120-C/U
Multi-layer composite pipes HENCO pipes with non-combustible insulation					
Ø ≤ 12mm x 1,6mm	≥ 150	lamella mat ≥ 250mm x ≥ 20mm	rigid floor	≥ 150	EI 120-U/C
Ø ≤ 32mm x 3,0mm					
Ø ≤ 63mm x 4,5mm		lamella mat ≥ 250mm x ≥ 30mm			
Multi-layer composite pipes HENCO pipes with PE-foam (PEF) insulation					
Ø ≤ 14mm x 2,0mm (PEF insulation, 6mm)	≥ 150	2x1 layer ArmaProtect FW1 (50mm inside, 50mm outside, wrap width = 100mm) + lamella mat ≥ 250mm x ≥ 20mm	rigid floor	≥ 150	EI 120-U/C
Ø ≤ 26mm x 3,0mm (PEF insulation, 6 -13mm)					
Ø ≤ 32mm x 2,0mm (PEF insulation, 6 – 10mm)					
Combustible pipes with/without 5mm PE-foam acoustic insulation made of PVC-U, PVC-C, PP-H or PE-100					
Ø ≤ 50mm (with/without PEF insulation, 5mm)	≥ 150	1x1 layer ArmaProtect FW1 (below, 70mm inside, 30mm outside, wrap width = 100mm)	rigid floor	≥ 150	EI 120-U/U
Ø ≤ 80mm (with/without PEF insulation, 5mm)		1x2 layers ArmaProtect FW1 (below, 70mm inside, 30mm outside, wrap width = 100mm)			
Ø ≤ 110mm (with/without PEF insulation, 5mm)		1x3 layers ArmaProtect FW1 (below, 70mm inside, 30mm outside, wrap width = 100mm)			
Ø ≤ 135mm (with/without PEF insulation, 5mm)		1x4 layers ArmaProtect FW1 (below, 70mm inside, 30mm outside, wrap width = 100mm)			EI 120-U/C
Ø ≤ 160mm (with/without PEF insulation, 5mm)		1x5 layers ArmaProtect FW1 (below, 70mm inside, 30mm outside, wrap width = 100mm)			
Combustible pipes with/without 5mm PE-foam acoustic insulation made of PVC					
Ø ≤ 75mm (with/without PE insulation, 5mm)	≥ 150	1x1 firestop collar ArmaProtect FC2 from below	rigid floor	≥ 150	EI 120-U/U
Ø ≤ 160mm (with/without PE insulation, 5mm)					EI 90-U/U
Combustible pipes with/without 5mm PE-foam acoustic insulation made of PE-HD					
Ø ≤ 125mm (with/without PE insulation, 5mm)	≥ 150	1x1 firestop collar ArmaProtect FC2 from below	rigid floor	≥ 150	EI 120-U/U
Ø ≤ 160mm (with/without PE insulation, 5mm)					EI 90-U/U

Applications in rigid floor ≥ 150mm (contd.)

Type	Seal thickness (mm)	Measures	Base material	Base material thickness (mm)	Classification
Combustible pipes with/without 5mm PE-foam acoustic insulation made of PP-H					
Ø ≤ 160mm (with/without PE insulation, 5mm)	≥ 150	1x1 firestop collar ArmaProtect FC2 from below	rigid floor	≥ 150	EI 120-U/U
Combustible pipes (type Conel Drain, Rehau Raupiano light) with/without 5mm PE-foam acoustic insulation					
Ø ≤ 110mm (with/without PE insulation, 5mm)	≥ 150	1x1 firestop collar ArmaProtect FC2 from below	rigid floor	≥ 150	EI 90-U/U
Combustible pipes (type Georg Fischer Silenta Premium) with/without 5mm PE-foam acoustic insulation					
Ø ≤ 160mm (with/without PE insulation, 5mm)	≥ 150	1x1 firestop collar ArmaProtect FC2 from below	rigid floor	≥ 150	EI 120-U/U
Combustible pipes (type Geberit Silent PP) with/without 5mm PE-foam acoustic insulation					
Ø ≤ 110mm (with/without PE insulation, 5mm)	≥ 150	1x1 firestop collar ArmaProtect FC2 from below	rigid floor	≥ 150	EI 90-U/U
Combustible pipes (type Geberit Silent Pro) with/without 5mm PE-foam acoustic insulation					
Ø ≤ 160mm (with/without PE insulation, 5mm)	≥ 150	1x1 firestop collar ArmaProtect FC2 from below	rigid floor	≥ 150	EI 120-U/U
Combustible pipes (type POLO-KAL NG) with/without 5mm PE-foam acoustic insulation					
Ø ≤ 160mm (with/without PE insulation, 5mm)	≥ 150	1x1 firestop collar ArmaProtect FC2 from below	rigid floor	≥ 150	EI 90-U/U
Combustible pipes (type POLO-KAL XS) with/without 5mm PE-foam acoustic insulation					
Ø ≤ 110mm (with/without PE insulation, 5mm)	≥ 150	1x1 firestop collar ArmaProtect FC2 from below	rigid floor	≥ 150	EI 120-U/U
Ø ≤ 160mm (with/without PE insulation, 5mm)					EI 90-U/U
Combustible pipes (type Wavin SITECH+) with/without 5mm PE-foam acoustic insulation					
Ø ≤ 160mm (with/without PE insulation, 5mm)	≥ 150	1x1 firestop collar ArmaProtect FC2 from below	rigid floor	≥ 150	EI 90-U/U
Combustible pipes (type Valsir TriPlus) with/without 5mm PE-foam acoustic insulation					
Ø ≤ 50mm (with/without PE insulation, 5mm)	≥ 150	1x1 firestop collar ArmaProtect FC2 from below	rigid floor	≥ 150	EI 90-U/U
Hydraulic hoses "HANSA FLEX" (also with wire braid reinforcement)					
Ø ≤ 55.9mm Hansa-Flex HD 200 (2SN), e.g. hydraulic hoses for elevators) with additional cables	≥ 150	2x1 layer ArmaProtect FW2 (50mm inside, 75mm outside, wrap width = 125mm) + lamella mat ≥ 250mm x ≥ 20mm	rigid floor	≥ 150	EI 120

Applications with ArmaProtect CT firestop cable tube (installation length 200 mm, type M) in rigid floor ≥ 150mm

Type	Base material	Base material thickness (mm)	Additional measures	Classification
Cables and cable bundles				
Cables Ø ≤ 21 mm	rigid floor	≥ 150	-	EI 120
Cables Ø ≤ 50 mm			only 100% configuration	EI 90 (E 120)
Cable bundles Ø ≤ 100 %, with cables Ø ≤ 14 mm			-	EI 120
Cable bundles Ø ≤ 100 %, with cables Ø ≤ 21 mm				EI 60 (E 90)
Cable bundles Ø ≤ 100 %, with cables Ø ≤ 21 mm			1x1 layer ArmaProtect FW2 + ≥ 50mm overlapping (outside, above or below, wrap width = 125mm)	EI 120
Conduits and conduit bundles				
Conduits Ø ≤ 32 mm, with/without cable Ø ≤ 14 mm	rigid floor	≥ 150	max. 3 pcs	EI 90-U/U
HVAC split line combinations combined lines for split HVAC units with twin or single copper pipe and pipe insulation 9mm thick, made from PE foam, in accordance with EN 14313; optionally with additional cable/pipe without spacing				
Combined lines for split HVAC-units pipe 1/pipe 2 (Ø = 6mm - 10mm/ 10mm - 18mm) with 9mm insulation made of PE-foam + plastic pipe PVC-U (Ø ≤ 25mm x 1.5mm) + max. 3 cables (Ø ≤ 14mm) without spacing	rigid floor	≥ 150	-	EI 90-U/U
			lamella mat ≥ 250 mm x ≥ 30 mm above	EI 120-U/U
PE lines ("speed pipes" - single "speed pipes" or "speed pipe" bundles, with and without glass fibre or micro cables				
max. 24 pcs., Ø ≤ 7mm	rigid floor	≥ 150	-	EI 120-U/U
max. 7 pcs., Ø ≤ 10mm				
max. 5 pcs., Ø ≤ 12mm				

Applications with ArmaProtect CT firestop cable tube (installation length 300 mm, type L) in rigid floor ≥ 150mm

Type	Base material	Base material thickness (mm)	Additional measures	Classification
Cables and cable bundles				
Cables Ø ≤ 21 mm	rigid floor	≥ 150	-	EI 120
Cables Ø ≤ 50 mm				EI 60 (E 120)
			100% configuration	EI 90 (E 120)
			1x1 layer ArmaProtect FW2 + lamella mat ≥ 250 mm x ≥ 30 mm, above	EI 120
Cables Ø ≤ 80 mm			-	EI 60 (E 120)
Cable bundles Ø ≤ 100 %, with cables Ø ≤ 21 mm				EI 120

Applications with ArmaProtect CT firestop cable tube (installation length 300 mm, type L) in rigid floor ≥ 150mm (contd.)

Type	Base material	Base material thickness (mm)	Additional measures	Classification
Conduits and conduit bundles				
Conduits Ø ≤ 63 mm, with/without cable Ø ≤ 21 mm	rigid floor	≥ 150		EI 120-U/U
Conduit bundles Ø ≤ 100 % with conduits ≤ 32 mm, with/without cable Ø ≤ 21 mm		≥ 200		
HVAC split line combinations combined lines for split HVAC units with twin or single copper pipe and pipe insulation 9mm thick, made from PE foam, in accordance with EN 14313; optionally with additional cable/pipe without spacing				
Combined lines for split HVAC-units pipe 1/pipe 2 (Ø = 6mm - 10mm/ 10mm - 18mm) with 9mm insulation made of PE-foam + plastic pipe PVC-U (Ø ≤ 25mm x 1.5mm) + max. 3 cables (Ø ≤ 14mm) without spacing	rigid floor	≥ 150	-	EI 90-U/U
Combined lines for split HVAC-units pipe 1/pipe 2 (Ø = 6mm - 22mm/ 6mm - 22mm) with 9mm insulation made of PE-foam + plastic pipe PE-100 (Ø ≤ 25mm x 1.5mm) + max. 3 cables (Ø ≤ 14mm) without spacing			lamella mat ≥ 250 mm x ≥ 30 mm above	EI 120-U/U
PE lines ("speed pipes" - single "speed pipes" or "speed pipe" bundles, with and without glass fibre or micro cables)				
max. 24 pcs., Ø ≤ 7mm	rigid floor	≥ 150	-	EI 120-U/U
max. 7 pcs., Ø ≤ 10mm				
max. 5 pcs., Ø ≤ 12mm				

Cables, cable bundles and cable trays in rigid floor ≥ 200mm

Type	Seal thickness (mm)	Measures	Base material	Base material thickness (mm)	Classification
Cables Ø ≤ 80mm	≥ 240	2x2 layers ArmaProtect FW2 (wrap width = 500mm)	rigid floor	≥ 200	EI 240
Cable bundles Ø ≤ 100mm with cables Ø ≤ 21mm					

TECHNICAL DATA - ARMAPROTECT CM FIRESTOP MORTAR

Brief description	ArmaProtect CM is a cementitious-based firestop mortar used to maintain the fire resistance performance of fire penetrations in walls and floors.
Material type	Cementitious based firestop mortar.
Additional material information	6 - 7 l water + 20 kg dry mortar ≈ 20 l ready-to-use wet mortar ≈ 20 l volume after hardening
Product colour range	Grey
Product range	Available as a 20 kg bag of mortar. 50 bags on a pallet.
Applications	Firestop mortar for mixed fire seals in walls and floors for blank openings, mixed and multiple services, cables, cable bundles and cable trays and non-combustible and combustible pipes.
Installation	For professional use only. Refer to third party published listings, national approvals / assessments and Armacell's product literature for specific application details as well as before handling this product.
Declaration of Performance (DoP)	ArmaProtect CM

Approvals and compliance

Specification compliance	• ETA-22/0064 acc. EN 1366-3	• UL acc. UL 1479 (ASTM E814)		

Property	Value/Assessment	Standard/Test method
Temperature range		
Operating temperature	5 °C to 200 °C (41 °F to 392 °F)	
Application temperature	5 °C to 25 °C (41 °F to 77 °F)	
Storage and transportation temperature	5 °C to 25 °C (41 °F to 77 °F)	
Mechanical properties		
Dry bulk density	ca. 900 kg/m^3	EN 998-2
Bulk density	1200 ± 100 kg/m^3 (fresh mortar)	EN 998-2
Pressure resistance	M 2.5	EN 998-2
Fire performance		
Reaction to fire	Class A1	EN 13501-1
Resistance to fire	See Annex	
Health and environment		
Emission of dangerous substances	No dangerous substances.	ETAG 026-02
Other technical features		
Durability and serviceability	Use category type Z_1	EOTA TR 024
Cure time	Fully cured after approximately 28 days.	
Safety information	Please refer to the safety data sheet available on our website.	
Shelf life	Can be kept for at least 12 months unopened if stored properly.	
Storage	Store in a cool and dry place with an ambient temperature of 5 °C to 25 °C and protect from frost.	

ArmaProtect CB
Coated firestop board system

INSTRUCTIONS FOR USE

The recommended application temperature is between 5 °C and 25 °C and relative humidity of less than 85%. Ensure that surfaces to be coated are free of impurities and old coatings.

- ArmaProtect ABLC: Use brush, roller or airless sprayer (nozzle orifice > 0.48mm / 0.019").
- ArmaProtect ABLF: Use spatula.

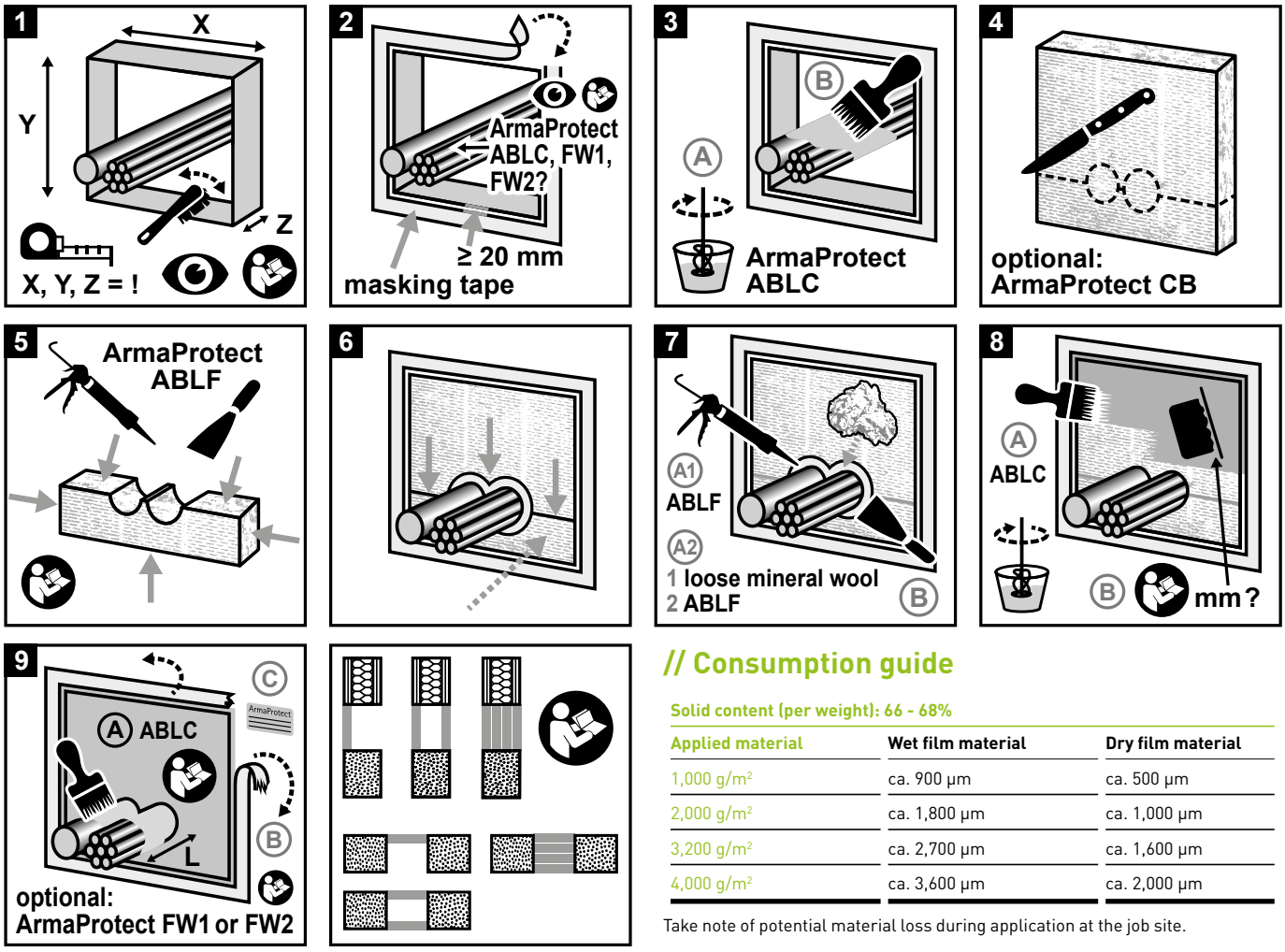

// Consumption guide

Solid content (per weight): 66 - 68%

Applied material	Wet film material	Dry film material
1,000 g/m²	ca. 900 µm	ca. 500 µm
2,000 g/m²	ca. 1,800 µm	ca. 1,000 µm
3,200 g/m²	ca. 2,700 µm	ca. 1,600 µm
4,000 g/m²	ca. 3,600 µm	ca. 2,000 µm

Take note of potential material loss during application at the job site.

MAIN APPLICATIONS ACC. ETA-22/0063

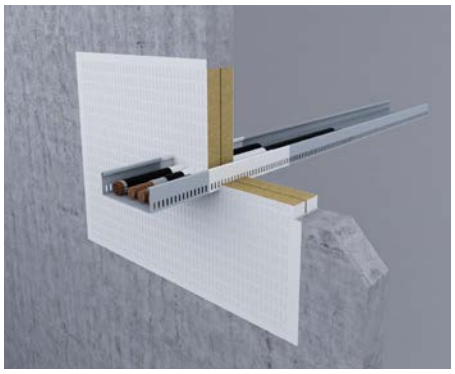
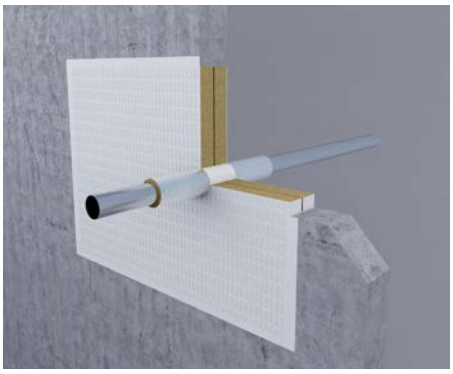
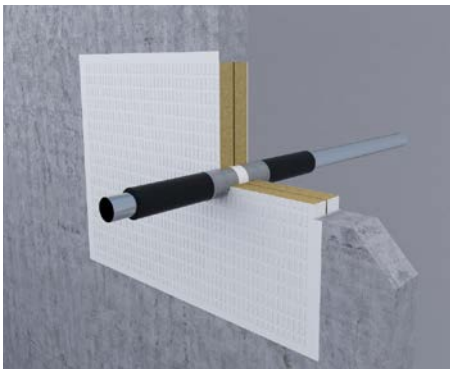

Single board system (1 x mineral wool board 60mm, 2 side coated)[1]	
Base material	Drywall, concrete wall, aerated concrete wall, masonry wall, concrete floor
Base material thickness	≥ 100mm (wall) ≥ 125mm (floor)
Seal thickness	≥ 60mm (wall) ≥ 60mm (floor)
Maximum seal size (wall)	1175mm x 1200mm
Maximum seal size (floor)	1200mm x 2400mm or 800 x ∞
Penetrants • Cables ≤ Ø 80mm[2] • Cable bundles ≤ Ø 100mm (with cables ≤ Ø 21mm)[2] • Cable trays[2] • Plastic conduits ≤ Ø 32mm (with cables ≤ Ø 21mm)[2] • Plastic conduit bundles ≤ Ø 100mm (conduits ≤ Ø 32mm, with cables ≤ Ø 21mm)[2] • PE lines "speed pipes" (24 x ≤ Ø 7.0mm, 7 x ≤ Ø 10.0mm, 5 x ≤ Ø 12.0mm)[1] • Non-combustible pipe with mineral wool insulation (steel pipes ≤ Ø 219.1mm, copper pipes ≤ Ø 88.9mm[1] • Non-combustible pipe with FEF insulation (steel pipes ≤ Ø 170mm, copper pipes ≤ Ø 108mm)[1] • Multi-layer composite pipes ≤ Ø 63mm[1] • Combustible pipes ≤ Ø 110mm[1] • HVAC split-line-combinations[1]	up to EI 90[1]

[1] See ETA-22/0063 for further installation details.
[2] Cables / cable bundles / cable trays to be coated with ArmaProtect ABLC or wrapped with ArmaProtect FW2, see further details in the ETA-22/0063

// Typical ETA approved systems[1]

Double board system (2 x mineral wool board 60mm, 1 side coated)[1]	
Base material	Drywall, concrete wall, aerated concrete wall, masonry wall, concrete floor
Base material thickness	≥ 100mm (wall) ≥ 150mm (floor)
Seal thickness	≥ 120mm (wall) ≥ 150mm (floor)
Maximum seal size (wall)	1400mm x 2000mm
Maximum seal size (floor)	1400mm x 2000mm
Penetrants • Cables ≤ Ø 80mm[2] • Cable bundles ≤ Ø 100mm (with cables ≤ Ø 21mm)[2] • Cable trays[2] • Plastic conduits ≤ Ø 32mm (with cables ≤ Ø 21mm)[2] • Plastic conduit bundles ≤ Ø 100mm (conduits ≤ Ø 32mm, with cables ≤ Ø 21mm)[2] • PE lines "speed pipes" (24 x ≤ Ø 7.0mm, 7 x ≤ Ø 10.0mm, 5 x ≤ Ø 12.0mm)[2] • Non-combustible pipe with mineral wool insulation (steel pipes ≤ Ø 323.9mm, copper pipes ≤ Ø 108mm)[1] • Non-combustible pipe with FEF insulation (steel pipes ≤ Ø 170mm, copper pipes ≤ Ø 108mm)[1] • Multi-layer composite pipes ≤ Ø 63mm[1] • Combustible pipes ≤ Ø 160mm[1] • HVAC split-line-combinations[1]	up to EI 120[1]

[1] See ETA-22/0063 for further installation details.
[2] Cables / cable bundles / cable trays to be coated with ArmaProtect ABLC or wrapped with ArmaProtect FW2, see further details in the ETA-22/0063.

Quadruple board system (4 x mineral wool board 60mm, 1 side coated)[1]	
Base material	Concrete wall, aerated concrete wall, masonry wall, concrete floor
Base material thickness	≥ 240mm (wall) ≥ 200mm (floor)
Seal thickness	≥ 240mm (wall) ≥ 240mm (floor)
Maximum seal size (wall)	600mm x 600mm
Maximum seal size (floor)	600mm x 1000mm
Penetrants • Cables ≤ Ø 80mm[2] • Cable bundles ≤ Ø 100mm (with cables ≤ Ø 21mm)[2] • Cable trays[2]	up to EI 240[1]

[1] See ETA-22/0063 for further installation details.
[2] Cables / cable bundles / cable trays to be wrapped with ArmaProtect FW2, see further details in the ETA-22/0063.

OTHER APPROVED SYSTEMS ACC. ETA-22/0063

Sealing system made of mineral wool and ArmaProtect ABLF Firestop Filler[1]	
Base material	Concrete wall, aerated concrete wall, masonry wall, concrete floor
Base material thickness	≥ 100mm (wall) ≥ 150mm (floor)
Seal thickness	≥ 100mm (wall) ≥ 150mm (floor)
Maximum seal size (wall)	500mm x 200mm (rectangular) Ø 350mm (round)
Maximum seal size (floor)	350mm x 150mm (rectangular) Ø 160mm (round)
Penetrants • Cables ≤ Ø 21mm[1] • Cable bundles ≤ Ø 100mm (with cables ≤ Ø 21mm)[1] • Plastic conduits ≤ Ø 32mm (with cables ≤ Ø 21mm)[2] • Plastic conduit bundles ≤ Ø 70mm (conduits ≤ Ø 16 - 50mm, with cables ≤ Ø 21mm)[2] • Plastic conduit bundles ≤ Ø 100mm (conduits ≤ Ø 32mm, with cables ≤ Ø 21mm)[2] • Metal conduits ≤ Ø 16mm (with cables ≤ Ø 14mm) and ≤ Ø 50mm (with cables ≤ Ø 21mm)[2] • Combustible pipes ≤ Ø 32mm[1] • Combustible pipes ≤ 219.1mm (with mineral wool insulation)[1] • HVAC split-line-combinations[1]	up to EI 90[1]

[1] See ETA-22/0063 for further installation details.
[2] Plastic conduits/plastic conduit bundles to be wrapped with ArmaProtect FW2, see further details in the ETA-22/0063.

// Field of application and installation details[1]

Installation details

Base material thickness	
Flexible wall (drywall) and rigid wall (concrete, aerated concrete, masonry) or rigid wall (concrete, aerated concrete, masonry)	≥ 100mm ≥ 150mm or ≥ 240mm
Concrete or aerated concrete floor	≥ 150mm or ≥ 200mm

Intumescent wrap	ArmaProtect FW2 or ArmaProtect FW1 Fixation with steel wire Ø ≥ 1.0mm.
Mineral wool boards	Rockwool "Hardrock 040" ("Hardrock II") boards, density: 150 kg/m3, thickness ≥ 50mm or ≥ 60mm (depending on application), reaction to fire: Class A1
Pipe shell	Rockwool "ProRox PS 960" (RS 880) pipe shell of concentrically wrapped Rockwool – unbacked, density: 100 - 120 kg/m³, reaction to fire: Class A1L
Mineral wool with grid strengthened and aluminium foil	Rockwool "Klimarock", density: 40 - 50 kg/m³, thickness: 30mm, reaction to fire: Class A2L-s1,d0
Loose mineral wool	Rockwool "ProRox LF 970", density: 100 kg/m³, reaction to fire: Class A1

Installation details (contd.)

First support of the services both-sided of the separating element (for single board application, installation depth 1 x ≥ 60mm)	
Cables, cable bundles, cable trays	≤ 200mm (wall)
Conduits	≤ 500mm
PE lines "speed pipes" for glass-fibre and micro-cables	The manufacturer's installation instructions are applied.
HVAC split line combinations	≤ 500mm
Non-combustible pipes with non-combustible insulation (mineral wool mats or shells)	≤ 850mm
Non-combustible pipes with combustible insulation (NH/ArmaFlex) with additional insulation	≤ 800mm (wall)
Non-combustible pipes with combustible insulation (NH/ArmaFlex) without additional insulation	≤ 1000mm (wall)
Non-combustible copper pipes with ArmaFlex Protect insulation	≤ 600mm
Non-combustible steel, stainless steel, cast iron steel pipes with ArmaFlex Protect insulation	≤ 1100mm
Double solar pipes "NanoSUN²"	The manufacturer's installation instructions are applied.
Multi-layer composite pipes "HENCO pipes"	≤ 550mm (wall)
Combustible pipes	≤ 400mm (wall)
Hydraulic hoses "HANSA FLEX" with wire-braid reinforcement	≤ 500mm
ArmaProtect CT firestop cable tube	≤ 300mm

[1] Please see further installation detail in the ETA-22/0063

First support of the services both-sided of the separating element (for double board application, installation depth 2 x ≥ 60mm)	
Cables, cable bundles, cable trays Conduits	≤ 500mm (wall) ≤ 250mm (floor)
PE lines "speed pipes" for glass-fibre and micro-cables	≤ 500mm
HVAC split line combinations	The manufacturer's installation instructions are applied.
Non-combustible pipes with non-combustible insulation (mineral wool mats or shells)	≤ 650mm
Non-combustible pipes with combustible insulation (FEF)	≤ 550mm
Double solar pipes "NanoSUN²"	≤ 500mm
Multi-layer composite pipes "HENCO pipes"	≤ 550mm
Combustible pipes	≤ 400mm

Installation details (contd.)

First support of the services both-sided of the separating element (for quadrupole board application, installation depth 4 x ≥ 60mm)	
Cables, cable bundles, cable trays	≤ 100mm
Combustible pipes	≤ 950mm

First support of the services both-sided of the separating element (for one side installation application in shaft walls, installation depth 2 x ≥ 60mm or 3 x ≥ 60mm)	
Cables, cable bundles, cable trays	≤ 300mm
Special duo-coax bundles	≤ 350mm
Conduits	≤ 300mm
PE lines "speed pipes" for glass-fibre and micro-cables	The manufacturer's installation instructions are applied.

First support of the services both-sided of the separating element (for one side installation application in flexible walls and rigid walls, installation depth 2 x ≥ 60mm or 3 x ≥ 60mm)	
Cables, cable bundles, cable trays	≤ 300mm
Special duo-coax bundles	≤ 350mm
Conduits	≤ 300mm
PE lines "speed pipes" for glass-fibre and micro-cables	The manufacturer's installation instructions are applied.
Non-combustible pipes with non-combustible insulation (mineral wool mats or shells)	≤ 600mm
Non-combustible pipes with combustible insulation (FEF)	
Combustible pipes	≤ 500mm

First support of the services both-sided of the separating element (for one side installation application in rigid floors, installation depth 2 x ≥ 60mm or 3 x ≥ 60mm)	
Cables, cable bundles, cable trays	≤ 500mm
Special duo-coax bundles	
Conduits	
PE lines "speed pipes" for glass-fibre and micro-cables	The manufacturer's installation instructions are applied.
HVAC split line combinations	≤ 500mm
Non-combustible pipes with non-combustible insulation (mineral wool mats or shells)	≤ 800mm
Non-combustible pipes with combustible insulation (FEF)	≤ 700mm
Multi-layer composite pipes "HENCO pipes"	≤ 750mm
Combustible pipes	

Installation details (contd.)

First support of the services both-sided of the separating element (for application in penetration seals of mineral wool with ablative filler ArmaProtect ABLF)	
Cables, cable bundles, cable trays	≤ 300mm
Rigid conduits	
HVAC split line combinations	
Double solar pipes "NanoSUN²"	
Combustible pipes	

Maximum opening size

Mixed penetration of one mineral wool board (1 x ≥ 60mm) and ablative coating ArmaProtect ABLC

Dimensions	Wall (mm)	Floor (mm)
Maximum dimensions of the opening (width x height)	1175 x 1200	1200 x 2400 or 800 x ∞
Dry film thickness: ≥ 0,75 / 1,0mm		

Mixed penetration seal of two mineral wool board (2 x ≥ 60mm) and ablative coating ArmaProtect ABLC

Dimensions	Wall (mm)	Floor (mm)
Maximum dimensions of the opening (width x height)	1400 x 1200	1400 x 2000
Dry film thickness: ≥ 1,0 / 2,0mm		

Mixed penetration seal of four mineral wool board (4 x ≥ 60mm) and ablative coating ArmaProtect ABLC

Dimensions	Wall (mm)	Floor (mm)
Maximum dimensions of the opening (width x height)	Cables: 600 x 600 Pipes: 400 x 400	600 x 1000
Dry film thickness: ≥ 2,0mm		

Mixed penetration seal with access from one side only

Dimensions	Wall (mm)	Shaft wall (mm)	Floor (mm)
Maximum dimensions of the opening (width x height) 2 layers mineral wool board ≥ 60 mm	1175 x 800	450 x 370	1200 x 1100
Maximum dimensions of the opening (width x height) 3 layers mineral wool board ≥ 60 mm			600 x 1100
Dry film thickness: ≥ 1,0 mm			

Penetration seal of mineral wool with ablative filler ArmaProtect ABLF

Dimensions	Wall (mm)	Floor (mm)
Maximum dimensions of the opening (width x height)	500 x 200	350 x 150
Maximum dimensions of the opening (circular, Ø)	350	160
Dry film thickness: ≥ 3mm		

Distance requirements

Single board system (1 x ≥ 60mm)

	Wall	Floor
Distance from other openings or installations	≥ 200mm	≥ 200mm
Reduced distance to other opening (≤ 400mm x 400mm)	≥ 100mm	≥ 100mm

Distance requirements for wall applications in mm

<table>
<tr><th></th><th rowspan="2">Cables</th><th rowspan="2">Cable bundles</th><th rowspan="2">Cable trays</th><th rowspan="2">Conduits / conduit bundles</th><th rowspan="2">Combustible pipes</th><th rowspan="2">Multi-layer composite pipes</th><th rowspan="2">Non-combustible pipes (with mineral wool insulation)</th><th rowspan="2">Non-combustible pipes (with FEF insulation)</th><th rowspan="2">HVAC split combinations</th><th rowspan="2">Double solar "NanoSUN²"</th><th rowspan="2">PE lines "speed pipes"</th><th colspan="3">Seal edge</th></tr>
<tr><th>Front</th><th>Back</th><th>Side</th></tr>
<tr><td>Cables</td><td colspan="3" rowspan="3">≥ 0*</td><td rowspan="3">≥ 0***</td><td rowspan="3">≥ 50</td><td rowspan="3">≥ 10***</td><td rowspan="3">≥ 70 ***</td><td colspan="2" rowspan="3">≥ 25</td><td rowspan="9">≥ 100</td><td rowspan="3">≥ 25</td><td rowspan="3">≥ 10</td><td colspan="2" rowspan="3">≥ 0</td></tr>
<tr><td>Cable bundles</td></tr>
<tr><td>Cable trays</td></tr>
<tr><td>Conduits / conduit bundles</td><td colspan="3">≥ 0</td><td>≥ 0</td><td>≥ 100</td><td rowspan="2">≥ 100</td><td colspan="2">≥ 100</td><td rowspan="6">≥ 100</td><td rowspan="9">≥ 100</td><td colspan="3">≥ 25</td></tr>
<tr><td>Combustible pipes</td><td colspan="3">≥ 50</td><td rowspan="8">≥ 100</td><td>≥ 25</td><td>≥ 25</td><td>≥ 50</td><td colspan="3">≥ 50</td></tr>
<tr><td>Multi-layer composite pipes</td><td colspan="3">≥ 10</td><td>≥ 100</td><td>≥ 0</td><td colspan="2">≥ 100</td><td rowspan="9">≥ 0</td></tr>
<tr><td>Non-combustible pipes (with mineral wool insulation)</td><td colspan="3">≥ 70**</td><td>≥ 25</td><td rowspan="7">≥ 100</td><td>≥ 0</td><td>≥ 100</td></tr>
<tr><td>Non-combustible pipes (with FEF insulation)</td><td colspan="3" rowspan="6">≥ 25</td><td>≥ 50</td><td rowspan="6">≥ 100</td><td>≥ 0</td></tr>
<tr><td>HVAC split combinations</td><td rowspan="5">≥ 100</td><td rowspan="5">≥ 100</td><td>≥ 0</td><td>≥ 85</td></tr>
<tr><td>Double solar "NanoSUN²"</td><td>≥ 100</td><td>≥ 100</td></tr>
<tr><td>PE lines "speed pipes"</td><td>≥ 50</td><td colspan="2">≥ 100</td><td>≥ 0</td></tr>
</table>

* Distance above each other ≥ 50mm.
** Distance at cable / cable bundle / cable support systems with wrap ≥ 50mm.
*** If cable ≤ 21mm then distance is ≥ 0mm.

Distance requirements for floor applications in mm

<table>
<tr><th></th><th rowspan="2">Cables</th><th rowspan="2">Cable bundles</th><th rowspan="2">Cable trays</th><th rowspan="2">Conduits / conduit bundles</th><th rowspan="2">Combustible pipes</th><th rowspan="2">Multi-layer composite pipes</th><th rowspan="2">Non-combustible pipes (with mineral wool insulation)</th><th rowspan="2">Non-combustible pipes (with FEF insulation)</th><th rowspan="2">HVAC split combinations</th><th rowspan="2">Double solar “NanoSUN²”</th><th rowspan="2">PE lines “speed pipes”</th><th colspan="3">Seal edge</th></tr>
<tr><th>Front</th><th>Back</th><th>Side</th></tr>
<tr><td>Cables</td><td colspan="3" rowspan="3">≥ 0*</td><td rowspan="3">≥ 0***</td><td rowspan="3">≥ 50</td><td rowspan="3">≥ 20</td><td rowspan="3">≥ 50</td><td rowspan="3">≥ 25**</td><td rowspan="3">≥ 50</td><td rowspan="3">≥ 10</td><td rowspan="3">≥ 20</td><td rowspan="3">≥ 5</td><td colspan="2" rowspan="3">≥ 0</td></tr>
<tr><td>Cable bundles</td></tr>
<tr><td>Cable trays</td></tr>
<tr><td>Conduits / conduit bundles</td><td colspan="3">≥ 0</td><td>≥ 0</td><td>≥ 100</td><td rowspan="2">≥ 100</td><td colspan="2">≥ 100</td><td rowspan="6">≥ 100</td><td rowspan="7">≥ 100</td><td rowspan="8">≥ 100</td><td colspan="3">≥ 25</td></tr>
<tr><td>Combustible pipes</td><td colspan="3">≥ 50</td><td rowspan="7">≥ 100</td><td>≥ 25</td><td>≥ 25</td><td>≥ 50</td><td colspan="3">≥ 50</td></tr>
<tr><td>Multi-layer composite pipes</td><td colspan="3">≥ 20</td><td>≥ 100</td><td>≥ 0</td><td colspan="2">≥ 100</td><td rowspan="8">≥ 0</td></tr>
<tr><td>Non-combustible pipes (with mineral wool insulation)</td><td colspan="3">≥ 50</td><td>≥ 25</td><td rowspan="6">≥ 100</td><td>≥ 0</td><td>≥ 100</td></tr>
<tr><td>Non-combustible pipes (with FEF insulation)</td><td colspan="3">≥ 25**</td><td>≥ 50</td><td rowspan="5">≥ 100</td><td>≥ 0</td></tr>
<tr><td>HVAC split combinations</td><td colspan="3">≥ 50</td><td rowspan="4">≥ 100</td><td rowspan="4">≥ 100</td><td rowspan="4">≥ 100</td><td>≥ 0</td></tr>
<tr><td>Double solar “NanoSUN²”</td><td colspan="3">≥ 10</td><td>≥ 0</td><td>≥ 100</td></tr>
<tr><td>PE lines “speed pipes”</td><td colspan="3">≥ 20</td><td>≥ 100</td><td>≥ 20</td><td colspan="2">≥ 100</td><td>≥ 0</td></tr>
</table>

* Distance above each other ≥ 50mm.
** Distance at cable / cable bundle / cable support systems with wrap ≥ 50mm
*** if cable ≤ 21mm then distance is ≥ 0mm

Distance requirements (contd.)

Double board system (2 x ⩾ 60mm)

	Wall	Floor
Distance from other openings or installations	⩾ 200mm	⩾ 200mm
Reduced distance to other opening (⩽ 400mm x 400mm)	⩾ 100mm	⩾ 100mm

Distance requirements for wall applications in mm

	Cables	Cable bundles	Cable trays	Conduits / conduit bundles	Combustible pipes	Multi-layer composite pipes	Non-combustible pipes (with mineral wool insulation lamella mat)	Non-combustible pipes (with mineral wool insulation ProRox PS 960)	Non-combustible pipes (with ArmaFlex Protect insulation)	Non-combustible pipes (with NH/ArmaFlex insulation)	Non-combustible pipes (with Kaifllex ST insulation)	HVAC split combinations	Double solar NanoSUN²"	PE lines "speed pipes"	Seal edge		
															Front	Back	Side
Cables	⩾ 0			⩾ 25	⩾ 25	⩾ 20	⩾ 0	⩾ 60	⩾ 75	⩾ 25	⩾ 90	⩾ 0	⩾ 30	⩾ 25	⩾ 0		
Cable bundles																	
Cable trays																	
Conduits / conduit bundles	⩾ 25				⩾ 100	⩾ 100	⩾ 60	⩾ 100	⩾ 100	⩾ 100	⩾ 100	⩾ 100	⩾ 100	⩾ 100	⩾ 25		
Combustible pipes				⩾ 100	⩾ 25		⩾ 100	⩾ 50		⩾ 40					⩾ 0		
Multi-layer composite pipes	⩾ 20				⩾ 100	⩾ 0		⩾ 100		⩾ 100							
Non-combustible pipes (with mineral wool insulation lamella mat)	⩾ 0			⩾ 60	⩾ 25	⩾ 100	⩾ 0					⩾ 0	⩾ 50				
Non-combustible pipes (with mineral wool insulation ProRox PS 960)	⩾ 60			⩾ 100	⩾ 50			⩾ 50				⩾ 100	⩾ 100				
Non-combustible pipes (with ArmaFlex Protect insulation)	⩾ 75				⩾ 100		⩾ 100	⩾ 100	⩾ 50	⩾ 0					⩾ 10		
Non-combustible pipes (with NH/ArmaFlex insulation)	⩾ 25				⩾ 40				⩾ 0						⩾ 0		
Non-combustible pipes (with Kaiflex ST insulation)	⩾ 90				⩾ 100				⩾ 100	⩾ 100	⩾ 70				⩾ 50		
HVAC split combinations	⩾ 0						⩾ 0				⩾ 100	⩾ 0	⩾ 25		⩾ 0		
Double solar "NanoSUN²"	⩾ 30						⩾ 50					⩾ 25	⩾ 100		⩾ 100		
PE lines "speed pipes"	⩾ 25						⩾ 100					⩾ 100		⩾ 0			

Distance requirements for floor applications in mm

<table>
<tr><th></th><th>Cables</th><th>Cable bundles</th><th>Cable trays</th><th>Conduits / conduit bundles</th><th>Combustible pipes</th><th>Multi-layer composite pipes</th><th>Non-combustible pipes (with mineral wool insulation lamella mat)</th><th>Non-combustible pipes (with mineral wool insulation ProRox PS 960)</th><th>Non-combustible pipes (with ArmaFlex Protect insulation)</th><th>Non-combustible pipes (with NH/ArmaFlex insulation)</th><th>Non-combustible pipes (with Kaiflex ST insulation)</th><th>HVAC split combinations</th><th>Double solar NanoSUN²”</th><th>PE lines “speed pipes”</th><th colspan="3">Seal edge</th></tr>
<tr><th></th><th></th><th></th><th></th><th></th><th></th><th></th><th></th><th></th><th></th><th></th><th></th><th></th><th></th><th>Front</th><th>Back</th><th>Side</th></tr>
<tr><td>Cables</td><td colspan="3" rowspan="3">≥ 0</td><td rowspan="3">≥ 0 (≥ 100 for cables Ø ≥ 21mm)</td><td rowspan="3">≥ 25</td><td rowspan="3">≥ 0</td><td rowspan="3">≥ 50</td><td rowspan="3">≥ 60</td><td rowspan="3">≥ 75</td><td rowspan="3">≥ 0</td><td rowspan="3">≥ 90</td><td rowspan="12">≥ 100</td><td rowspan="9">≥ 100</td><td rowspan="12"></td><td colspan="3" rowspan="3">≥ 0</td></tr>
<tr><td>Cable bundles</td></tr>
<tr><td>Cable trays</td></tr>
<tr><td>Conduits / conduit bundles</td><td colspan="3">≥ 0 (≥ 100 for cables Ø ≥ 21mm)</td><td>≥ 100</td><td rowspan="2">≥ 100</td><td rowspan="3">≥ 100</td><td rowspan="3">≥ 100</td><td rowspan="6">≥ 100</td><td>≥ 100</td><td rowspan="6">≥ 100</td><td colspan="3">≥ 25</td></tr>
<tr><td>Combustible pipes</td><td colspan="3">≥ 25</td><td>≥ 25</td><td>≥ 25</td><td>≥ 50</td><td rowspan="4">≥ 0</td><td colspan="3" rowspan="4">≥ 0</td></tr>
<tr><td>Multi-layer composite pipes</td><td colspan="3">≥ 0</td><td rowspan="3">≥ 100</td><td rowspan="6">≥ 100</td><td rowspan="2">≥ 0</td><td rowspan="6">≥ 100</td></tr>
<tr><td>Non-combustible pipes (with mineral wool insulation lamella mat)</td><td colspan="3">≥ 50</td><td rowspan="3">≥ 0</td><td rowspan="3">≥ 50</td></tr>
<tr><td>Non-combustible pipes (with mineral wool insulation ProRox PS 960)</td><td colspan="3">≥ 60</td><td>≥ 60</td><td rowspan="6">≥ 100</td><td rowspan="6">≥ 100</td><td rowspan="6">≥ 100</td><td rowspan="6">-</td><td colspan="3">≥ 10</td></tr>
<tr><td>Non-combustible pipes (with ArmaFlex Protect insulation)</td><td colspan="3">≥ 75</td><td rowspan="6">≥100</td><td rowspan="6">≥ 100</td><td rowspan="6">≥ 65</td><td rowspan="6">≥ 50</td><td colspan="3">≥ 20</td></tr>
<tr><td>Non-combustible pipes (with NH/ArmaFlex insulation)</td><td colspan="3">≥ 0</td><td>≥ 50</td><td rowspan="5">≥ 0</td><td rowspan="5">≥ 70</td><td colspan="3">≥ 0</td></tr>
<tr><td>Non-combustible pipes (with Kaiflex ST insulation)</td><td colspan="3">≥ 90</td><td rowspan="4">≥ 100</td><td rowspan="4">≥ 100</td><td rowspan="4">≥ 100</td><td rowspan="4">≥ 100</td><td colspan="3">≥ 50</td></tr>
<tr><td>HVAC split combinations</td><td colspan="3">≥ 50</td><td rowspan="3">≥ 0</td><td rowspan="3">≥ 25</td><td colspan="3">≥ 0</td></tr>
<tr><td>Double solar “NanoSUN²”</td><td colspan="3">≥ 100</td><td>≥ 50</td><td>≥ 25</td><td>≥ 100</td><td colspan="3">≥ 100</td></tr>
<tr><td>PE lines “speed pipes”</td><td colspan="15">-</td></tr>
</table>

One side installation system (2 x ≥ 50mm and 3 x ≥ 50mm)

	Wall	Shaft wall	Floor
Distance from other openings or installations	≥ 200mm	≥ 200mm	≥ 200mm

Distance requirements for one side installation system in flexible wall and rigid wall applications in mm

<table>
<tr><th rowspan="2"></th><th rowspan="2">Cables</th><th rowspan="2">Cable bundles</th><th rowspan="2">Cable trays</th><th rowspan="2">Special-duo-coax bundles</th><th rowspan="2">Conduits / conduit bundles</th><th rowspan="2">Combustible pipes</th><th rowspan="2">Non-combustible pipes (with mineral wool insulation)</th><th rowspan="2">Non-combustible pipes (with FEF insulation)</th><th rowspan="2">PE lines "speed pipes"</th><th colspan="3">Seal edge</th></tr>
<tr><th>Front</th><th>Back</th><th>Side</th></tr>
<tr><td>Cables</td><td colspan="2" rowspan="3">≥ 0</td><td rowspan="2">≥ 0</td><td rowspan="3">≥ 0</td><td rowspan="3">≥ 25</td><td rowspan="3">≥ 50</td><td rowspan="3">≥ 20</td><td rowspan="3">≥ 25</td><td rowspan="3">≥ 10</td><td colspan="3" rowspan="3">≥ 0</td></tr>
<tr><td>Cable bundles</td></tr>
<tr><td>Cable trays</td><td>≥ 0 (≥ 40 above each other)</td></tr>
<tr><td>Special-duo-coax bundles</td><td colspan="2">≥ 0</td><td>≥ 100</td><td rowspan="2">≥ 100</td><td colspan="2" rowspan="2">≥ 100</td><td rowspan="4">≥ 100</td></tr>
<tr><td>Conduits / conduit bundles</td><td colspan="3">≥ 25</td><td rowspan="6">≥ 100</td><td>≥ 0</td><td colspan="3">≥ 10</td></tr>
<tr><td>Combustible pipes</td><td colspan="3">≥ 50</td><td rowspan="5">≥ 100</td><td rowspan="2">≥ 0</td><td colspan="3" rowspan="5">≥ 0</td></tr>
<tr><td>Non-combustible pipes (with mineral wool insulation</td><td colspan="3">≥ 20</td><td rowspan="2">≥ 0</td></tr>
<tr><td>Non-combustible pipes (with NH/ArmaFlex insulation)</td><td colspan="3">≥ 25</td></tr>
<tr><td>PE lines "speed pipes"</td><td colspan="3">≥ 10</td><td colspan="2">≥ 100</td><td>≥ 0</td></tr>
</table>

Distance requirements for one side installation system in shaft wall applications (2 x ≥ 50mm) in mm

<table>
<tr><th rowspan="2"></th><th rowspan="2">Cables</th><th rowspan="2">Cable bundles</th><th rowspan="2">Cable trays</th><th rowspan="2">Special-duo-coax bundles</th><th rowspan="2">Conduits / conduit bundles</th><th rowspan="2">PE lines "speed pipes"</th><th colspan="3">Seal edge</th></tr>
<tr><th>upper</th><th>under</th><th>side</th></tr>
<tr><td>Cables</td><td colspan="2" rowspan="3">≥ 0 mm</td><td rowspan="2">≥ 0</td><td rowspan="3">≥ 0</td><td rowspan="3">≥ 25</td><td rowspan="3">≥ 10</td><td colspan="3" rowspan="3">≥ 0</td></tr>
<tr><td>Cable bundles</td></tr>
<tr><td>Cable trays</td><td>≥ 0 (≥ 40 above each other)</td></tr>
<tr><td>Special-duo-coax bundles</td><td colspan="2">≥ 0</td><td>≥ 100</td><td rowspan="2">≥ 100</td><td colspan="3" rowspan="2">≥ 100</td></tr>
<tr><td>Conduits / conduit bundles</td><td colspan="3">≥ 25</td><td rowspan="2">≥ 100</td><td>≥ 0</td></tr>
<tr><td>PE lines "speed pipes"</td><td colspan="3">≥ 10</td><td>≥ 100</td><td colspan="3">≥ 0 mm</td></tr>
</table>

Distance requirements in electrical penetration seals for rigid wall applications (≥ 240 mm) and rigid floor (≥ 200 mm) in mm

Distances

Distances wall / floor	Cables	Cable bundles	Cable trays	Seal edge		
				Upper	Under	Side
Cables	≥ 0		≥ 0	≥ 0		
Cable bundles			≥ 0 (≥ 50 above each other)			
Cable trays						

Distance requirements for one side installation system in rigid floor applications (2 x ≥ 50mm and 3 x ≥ 50) in mm

	Cables	Cable bundles	Cable trays	Special-duo-coax bundles	Conduits / conduit bundles	Combustible pipes	Multi-layer composite pipes	Non-combustible pipes (with mineral wool insulation)	Non-combustible pipes (with FEF insulation)	HVAC split combinations	PE lines "speed pipes"	Seal edge		
												Front	Back	Side
Cables	≥ 0			≥ 100	≥ 50	≥ 50	≥ 100	≥ 0	≥ 25	≥ 100	≥ 0	≥ 0		
Cable bundles											≥ 100			
Cable trays														
Special-duo-coax bundles	≥ 100				≥ 100	≥ 100		≥ 100						
Conduits / conduit bundles	≥ 50			≥ 25	≥ 25							≥ 100		
Combustible pipes				≥ 100	≥ 100		≥ 45	≥ 0				≥ 0		
Multi-layer composite pipes	≥ 100					≥ 45	≥ 100	≥ 0	≥ 100					
Non-combustible pipes (with mineral wool insulation	≥ 0					≥ 0	≥ 0	≥ 100	≥ 0					
Non-combustible pipes (with NH/ArmaFlex insulation)	≥ 25						≥ 100	≥ 0				≥ 100		
HVAC split line combinations	≥ 100					≥ 100		≥ 100						
PE lines "speed pipes"	≥ 0										≥ 0	≥ 0		

Penetration seals of mineral wool with ablative filler ArmaProtect ABLF

	Wall	Floor
Distance to other penetration seals of mineral wool with ablative filler ArmaProtect ABLF	≥ 50mm	≥ 100mm
Distance to other opening (≤ 400mm x 400mm)	≥ 100mm	≥ 100mm
Distance to other opening (≤ 200mm x 200mm)	≥ 100mm	≥ 100mm
Other distances	≥ 200mm	≥ 200mm

Distance requirements penetration seals of mineral wool with ablative filler ArmaProtect ABLF in rigid walls and rigid floors in mm

Cables / cable bundles	
Distance to side edge	≥ 0
Distance to other cables / cable bundles	
Distance to combustible pipes	
Distance to double solar pipes "NanoSUN²"	≥ 100
Distance to HVAC split line combinations	

Conduits	
Distance to side edge	≥ 0
Distance to other conduits	
Distance to single cables	
Distance to cable bundles	≥ 100
Distance to double solar pipes "NanoSUN²"	
Distance to HVAC split line combinations	≥ 25

Combustible pipes	
Distance to side edge	≥ 0
Distance to other combustible pipes	
Distance to single cables	
Distance to double solar pipes "NanoSUN²"	≥ 100
Distance to HVAC split line combinations	

Distance requirements penetration seals of mineral wool with ablative filler ArmaProtect ABLF in rigid walls and rigid floors in mm (contd.)

Double solar pipes "NanoSUN²"	
Distance to side edge	≥ 0
Distance to other double solar pipes "NanoSUN²"	≥ 0 (walls) ≥ 30 (floors)
Distance to cables and conduits	≥ 100
Distance to HVAC split line combinations	≥ 25
Distance to other combustible pipes	≥ 100

HVAC split line combinations	
Distance to side edge	≥ 0
Distance to cables and conduits	≥ 100
Distance to double solar pipes "NanoSUN²"	

Applications - Single board system (1 x ≥ 60mm)

Application of single board system (1 x ≥ 60mm) with ablative coating ArmaProtect ABLC in flexible wall and rigid wall (design variants)

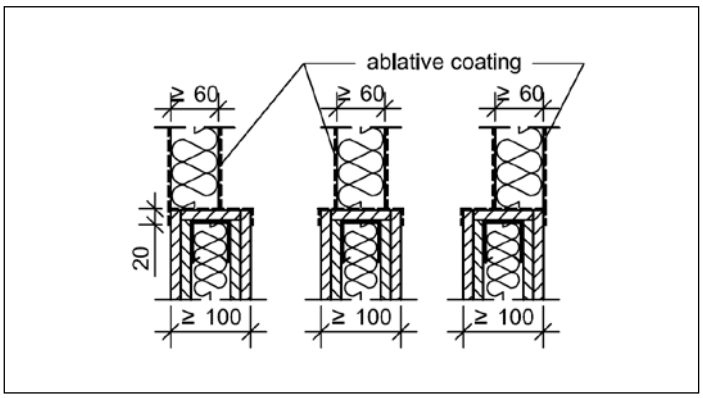

Legend

Dimensions in mm

Application of single board system (1 x ≥ 60mm) with ablative coating ArmaProtect ABLC in rigid floor (design variants)

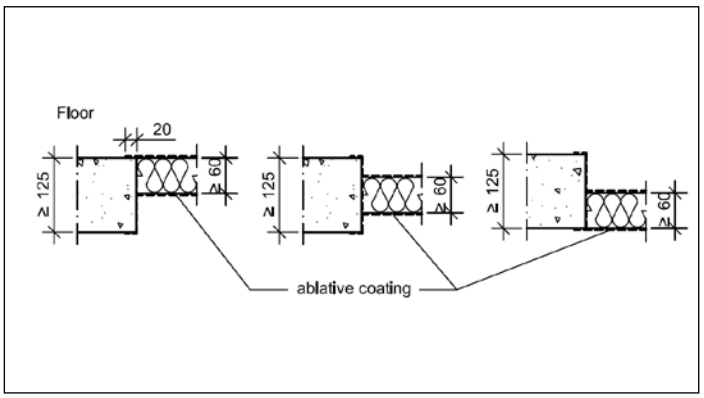

Legend

Dimensions in mm

Application with cables, cable bundles and cable trays with ablative coating ArmaProtect ABLC in single board system (1 x ≥ 60mm) in flexible wall, rigid wall and rigid floor

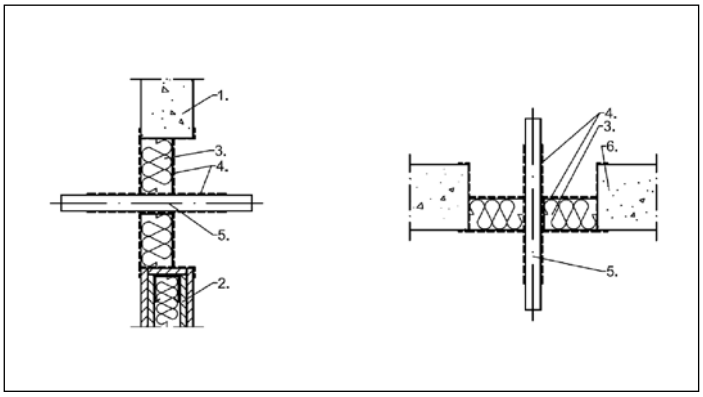

Legend
1. rigid wall ≥ 100 mm
2. flexible wall ≥ 100 mm
3. mineral wool board
4. ablative coating ArmaProtect ABLC
5. cables / cable bundles / cable trays
6. rigid floor ≥ 125 mm

Dimensions in mm

Legend
3. mineral wool board
4. ablative coating ArmaProtect ABLC
5. cables / cable bundles / cable trays
6. rigid floor ≥ 125 mm

Dimensions in mm

Application with cables, cable bundles and cable trays with intumescent wrap in single board system (1 x ≥ 60mm) in flexible wall, rigid wall and rigid floor

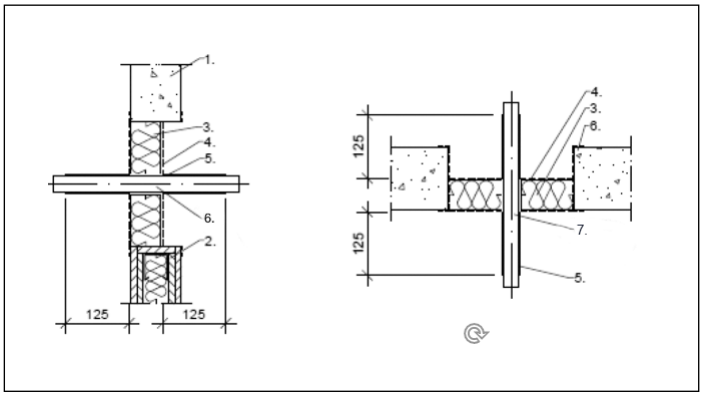

Legend
1. rigid wall ≥ 100 mm
2. flexible wall ≥ 100 mm
3. mineral wool board
4. ablative coating ArmaProtect ABLC
5. intumescent wrap ArmaProtect FW2
6. cables / cable bundles / cable trays

Dimensions in mm

Legend
3. mineral wool board
4. ablative coating ArmaProtect ABLC
5. intumescent wrap ArmaProtect FW2
6. rigid floor ≥ 125 mm
7. cables / cable bundles / cable trays

Dimensions in mm

Application with conduits and conduit bundles with intumescent wrap in single board system (1 x ≥ 60mm) in flexible wall, rigid wall and rigid floor

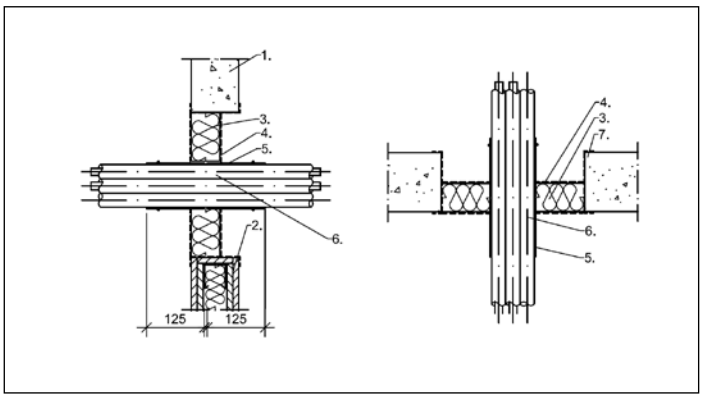

Legend

1. rigid wall ≥ 100mm
2. flexible wall ≥ 100mm
3. mineral wool board
4. ablative coating ArmaProtect ABLC
5. intumescent wrap ArmaProtect FW2
6. conduit / conduit bundles
7. rigid floor ≥ 125mm

Dimensions in mm

Application with PE lines ("speed pipes" and "speed pipe" bundles) with intumescent wrap in single board system (1 x ≥ 60mm) in flexible wall, rigid wall and rigid floor

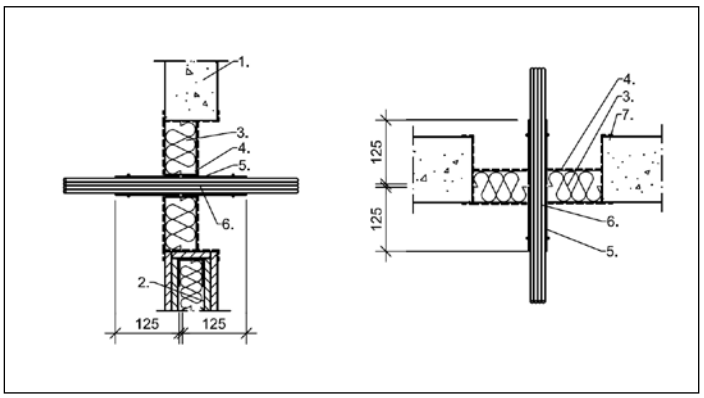

Legend

1. rigid wall ≥ 100mm
2. flexible wall ≥ 100mm
3. mineral wool board
4. ablative coating ArmaProtect ABLC
5. intumescent wrap ArmaProtect FW2
6. PE line ("speed pipes" / "speed pipe" bundles
7. rigid floor ≥ 125mm

Dimensions in mm

Application with HVAC split line combinations with intumescent wrap in single board system (1 x ≥ 60mm) in flexible wall, rigid wall and rigid floor

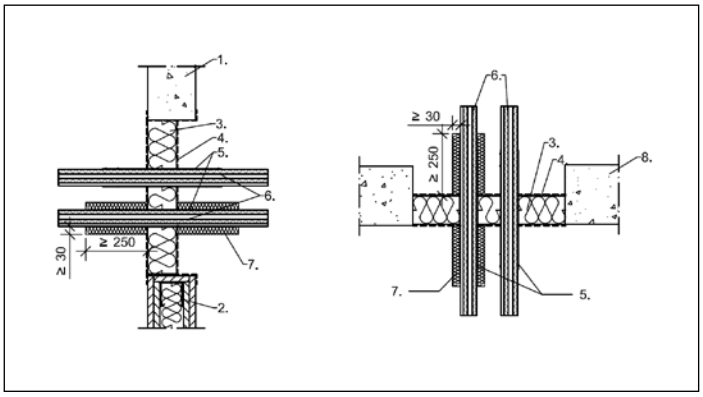

Legend

1. rigid wall ≥ 100mm
2. flexible wall ≥ 100mm
3. mineral wool board
4. ablative coating ArmaProtect ABLC
5. intumescent wrap ArmaProtect FW2
6. HVAC split line combination
7. lamella mat
8. rigid floor ≥ 125mm

Dimensions in mm

Application with non-combustible pipes with non-combustible insulation in single board system (1 x ≥ 60mm) in flexible wall, rigid wall and rigid floor

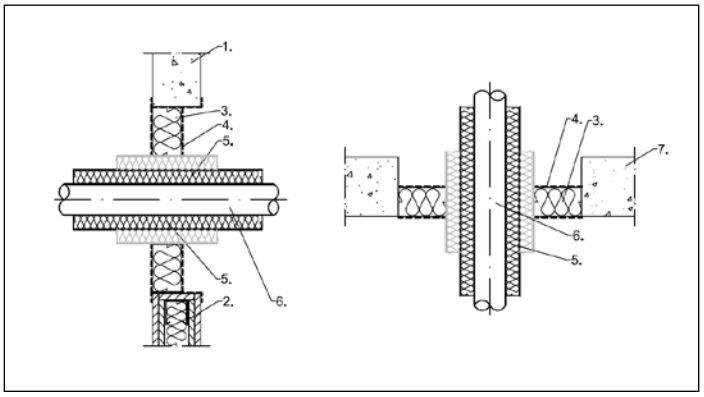

Legend

1. rigid wall ≥ 100mm
2. flexible wall ≥ 100mm
3. mineral wool board
4. ablative coating ArmaProtect ABLC
5. lamella mat
6. non-combustible pipes
7. rigid floor ≥ 125mm

Application with non-combustible pipes with combustible insulation and intumescent wrap in single board system (1 x ≥ 60mm) in flexible wall, rigid wall and rigid floor

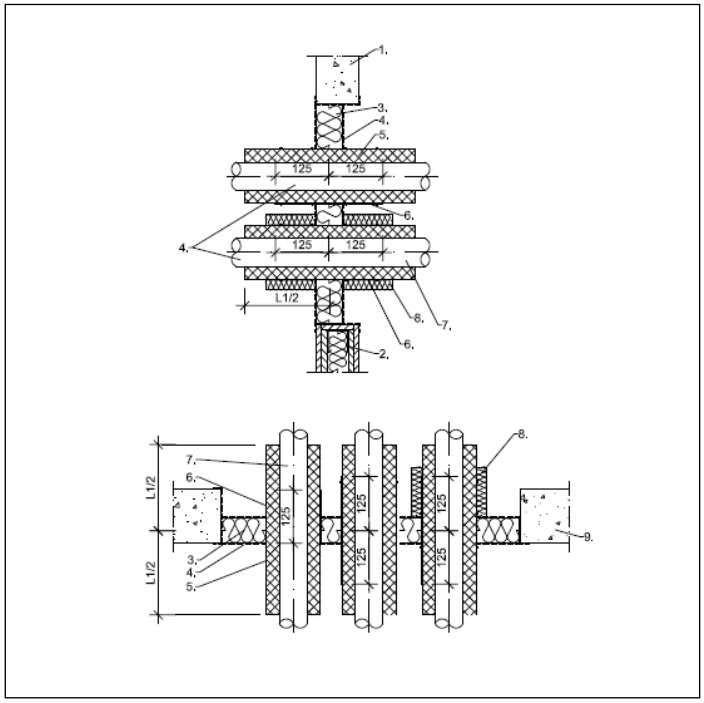

Legend

1. rigid wall ≥ 100mm
2. flexible wall ≥ 100mm
3. mineral wool board
4. ablative coating ArmaProtect ABLC
5. FEF insulation
6. non-combustible pipes
7. intumescent wrap ArmaProtect FW2
8. additional protection with lamella mat
9. rigid floor ≥ 125mm

Dimensions in mm

Application with non-combustible pipes with ArmaFlex Protect insulation in single board system (1 x ≥ 60mm) in flexible wall, rigid wall and rigid floor

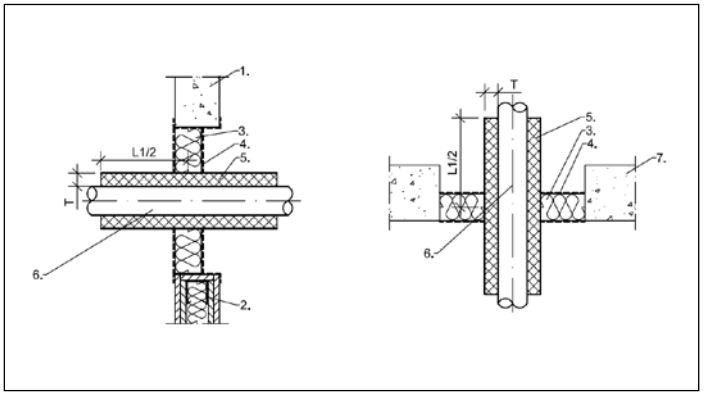

Legend

1. rigid wall ≥ 100mm
2. flexible wall ≥ 100mm
3. mineral wool board
4. ablative coating ArmaProtect ABLC
5. ArmaFlex Protect
6. non-combustible pipes
7. rigid floor ≥ 125mm

Application with double solar pipes "NanoSUN²" in single board system (1 x ≥ 60mm) with intumescent wrap in flexible wall, rigid wall and rigid floor

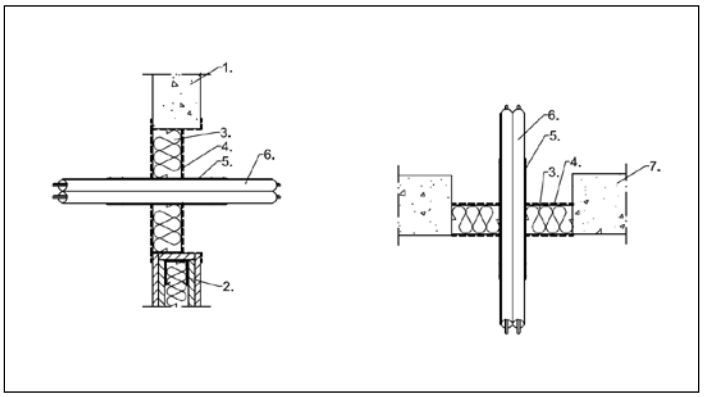

Legend

1. rigid wall ≥ 100mm
2. flexible wall ≥ 100mm
3. mineral wool board
4. ablative coating ArmaProtect ABLC
5. intumescent wrap ArmaProtect FW2
6. double solar pipes "NanoSUN²"
7. rigid floor ≥ 125mm

Application with multi-layer composite pipes with intumescent wrap in single board system (1 x ≥ 60mm) in flexible wall, rigid wall and rigid floor

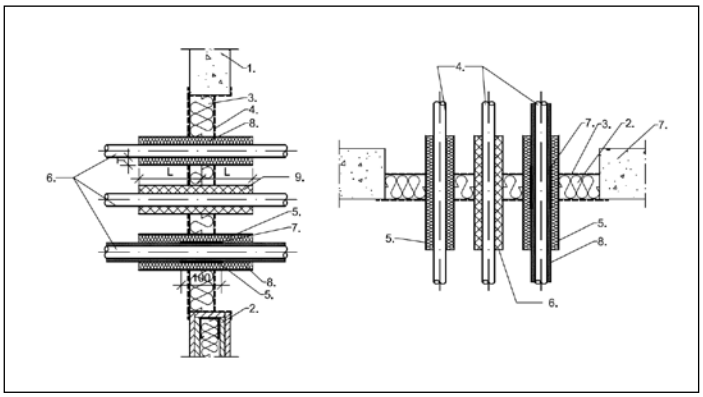

Legend

1. rigid wall ≥ 100mm
2. flexible wall ≥ 100mm
3. mineral wool board
4. ablative coating ArmaProtect ABLC
5. intumescent wrap ArmaProtect FW1
6. multi-layer composite pipe
7. lamella mat
8. FEF insulation

Legend

2. mineral wool board
3. ablative coating ArmaProtect ABLC
4. multi-layer composite pipe
5. FEF insulation
6. lamella mat
7. rigid floor ≥ 125mm
8. intumescent wrap ArmaProtect FW1

Application with combustible pipes with intumescent wrap in single board system (1 x ≥ 60mm) in flexible wall, rigid wall and rigid floor

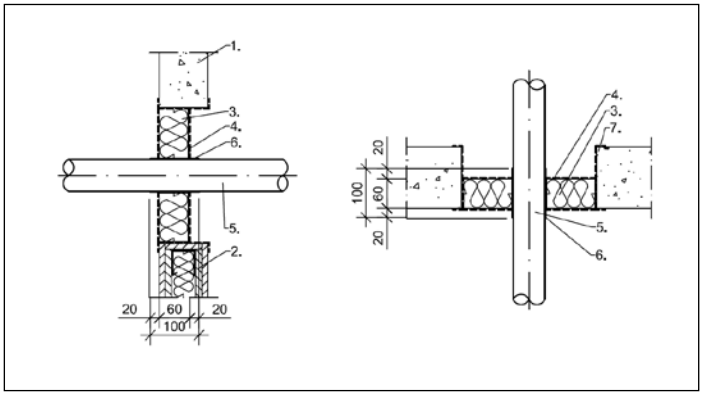

Legend

1. rigid wall ≥ 100mm
2. flexible wall ≥ 100mm
3. mineral wool board
4. ablative coating ArmaProtect ABLC
5. combustible pipe
6. intumescent wrap ArmaProtect FW1
7. rigid floor ≥ 125mm

Dimensions in mm

Resistance to fire - Single board system (1x ≥ 60mm)

Wall applications

Application in in single board system (1x ≥ 60mm) with ablative coating ArmaProtect ABLC

Type	Seal thickness (mm)	Measures	Base material	Base material thickness (mm)	Classification
Cables, cable bundles and cable trays					
Cables Ø ≤ 21mm	≥ 60	ArmaProtect ABLC ≥ 100mm x ≥ 0,75mm dry film thickness	flexible wall & rigid wall	≥ 100	EI 60 (E 90)
Cables Ø > 21 - ≤ 50mm		ArmaProtect ABLC ≥ 150mm x ≥ 1mm dry film thickness			
Cables Ø > 50 - ≤ 80mm					
Cable bundles Ø ≤ 100mm		ArmaProtect ABLC ≥ 100mm x ≥ 0,75mm dry film thickness			
		ArmaProtect ABLC ≥ 150mm x ≥ 1mm dry film thickness			EI 90
Cables Ø ≤ 21mm without cable tray through core drilled holes		2x1 layer ArmaProtect FW2 + ≥ 45mm overlapping (outside, wrap width = 125mm)			EI 90
Cables Ø ≤ 21mm					EI 60 (E 90)
Cables Ø > 21 - ≤ 50mm					
Cables Ø > 50 - ≤ 80mm					
Cable bundles Ø ≤ 100mm					
Conduits and conduit bundles					
Plastic conduits Ø ≤ 32mm (single or bundled Ø ≤ 100mm, with/without cables Ø ≤ 21mm)	≥ 60	2x2 layers ArmaProtect FW2 (30mm inside, 95mm outside, wrap width = 125mm)	flexible wall & rigid wall	≥ 100	EI 60-U/U (E 90-U/U)
PE lines ("speed pipes" - single "speed pipes" or "speed pipe" bundles, with and without glass fibre cables)					
max. 24 pcs. Ø ≤ 7mm	≥ 60	2x1 layer ArmaProtect FW2 (30mm inside, 95mm outside, wrap width = 125mm)	flexible wall & rigid wall	≥ 100	EI 60-U/U (E 90-U/U)
max. 7 pcs. Ø ≤ 10mm					
max. 5 pcs. Ø ≤ 12mm					
HVAC split line combinations					
Pipe (Ø = 6/10) with 9mm PE foam + PVC-U pipe (Ø ≤ 25mm) + 2 cables (Ø ≤ 14mm)	≥ 60	2x2 layers ArmaProtect FW2 (30mm inside, 95mm outside, wrap width = 125mm)	flexible wall & rigid wall	≥ 100	EI 60-U/U (E 90-U/U)
Pipe (Ø = 22/22 or Ø = 6 – 22) with 9mm PE foam + PVC-U pipe (Ø ≤ 25mm) + 2 cables (Ø ≤ 21mm)		1x2 layers ArmaProtect FW2 (30mm inside, 95mm outside, wrap width = 125mm) + lamella mat ≥ 250mm x ≥ 30mm			EI 30

Application in in single board system (1x ≥ 60mm) with ablative coating ArmaProtect ABLC (contd.)

Pipe Ø (mm)	Pipe wall thickness (mm)	Seal thickness (mm)	Measures	Base material	Base material thickness (mm)	Classification
Copper, steel, stainless steel, cast iron pipes with non-combustible insulation						
≤ 15	≥ 0,8	≥ 60	lamella mat ≥ 250mm x ≥ 20mm	flexible wall & rigid wall	≥ 100	EI 60-C/U (E 90-C/U)
≤ 22	≥ 1		lamella mat ≥ 250mm x ≥ 60mm or lamella mat ≥ 500mm x ≥ 20mm			
≤ 54	≥ 1,5		lamella mat ≥ 500mm x ≥ 30mm			
≤ 88,9	≥ 2		lamella mat ≥ 800mm x ≥ 40mm			
Steel, stainless steel, cast iron pipes with non-combustible insulation						
≤ 88,9	≥ 2	≥ 60	lamella mat ≥ 800mm x ≥ 40mm	flexible wall & rigid wall	≥ 100	EI 90-C/U
≤ 114,3	≥ 3,6		lamella mat ≥ 500mm x ≥ 40mm			EI 60-C/U (E 90-C/U)
≤ 170	≥ 3		lamella mat ≥ 800mm x ≥ 60mm + lamella mat ≥ 500mm x ≥ 30mm*			EI 60-C/U
≤ 219,1	≥ 5					EI 60-C/U (E 90-C/U)

* as additional protection

Copper, steel, stainless steel, cast iron pipes with NH/ArmaFlex insulation						
≤ 15	≥ 0,8	≥ 60	NH/ArmaFlex ≥ 500mm x 13 – 24mm + 2x2 layers ArmaProtect FW2 (30mm inside, 95mm outside, wrap width = 125mm)	flexible wall & rigid wall	≥ 100	EI 60-C/U (E 90-C/U)
			NH/ArmaFlex ≥ 500mm x 25mm + 2x2 layers ArmaProtect FW2 (30mm inside, 95mm outside, wrap width = 125mm)			EI 90-C/U
≤ 28	≥ 1		NH/ArmaFlex ≥ 750mm x 13 – 24mm + 2x2 layers ArmaProtect FW2 (30mm inside, 95mm outside, wrap width = 125mm)			EI 60-C/U (E 90-C/U)
			NH/ArmaFlex ≥ 750mm x 25mm + 2x2 layers ArmaProtect FW2 (30mm inside, 95mm outside, wrap width = 125mm)			EI 90-C/U
			NH/ArmaFlex ≥ 750mm x 13 – 19mm + 2x1 layer ArmaProtect FW2 (30mm inside, 95mm outside, wrap width = 125mm) + lamella mat ≥ 250mm x ≥ 20mm*			
≤ 54	≥ 1,5		NH/ArmaFlex ≥ 1000mm x 29 – 57mm+ 2x1 layer ArmaProtect FW2 (30mm inside, 95mm outside, wrap width = 125mm) + lamella mat ≥ 500mm x ≥ 30mm*			
≤ 88,9	≥ 2		NH/ArmaFlex ≥ 1000mm x 25 – 89mm + 2x2 layers ArmaProtect FW2 (30mm inside, 95mm outside, wrap width = 125mm) + lamella mat ≥ 500mm x ≥ 30mm*			
≤108	≥ 2,5		NH/ArmaFlex ≥ 1000mm x 57mm + 2x2 layers ArmaProtect FW2 (30mm inside, 95mm outside, wrap width = 125mm) + lamella mat ≥ 750mm x ≥ 40mm*			

* as additional protection

Application in in single board system (1x ≥ 60mm) with ablative coating ArmaProtect ABLC (contd.)

Pipe Ø (mm)	Pipe wall thickness (mm)	Seal thickness (mm)	Measures	Base material	Base material thickness (mm)	Classification
Steel, stainless steel, cast iron pipes with NH/ArmaFlex insulation						
≤ 108	≥ 2,5	≥ 60	NH/ArmaFlex ≥ 1000mm x 25mm + 2x2 layers ArmaProtect FW2 (30mm inside, 95mm outside, wrap width = 125mm) + lamella mat ≥ 750mm x ≥ 40mm*	flexible wall & rigid wall	≥ 100	EI 60-C/U (E 90-C/U)
* as additional protection						
Copper, steel, stainless steel, cast iron pipes with ArmaFlex Protect insulation						
≤ 88,9	≥ 0,8	≥ 60	ArmaFlex Protect ≥ 500mm x 25 -51mm	flexible wall & rigid wall	≥ 100	EI 60-C/U (E 90-C/U)
Steel, stainless steel, cast iron pipes with ArmaFlex Protect insulation						
≤ 170	≥ 3	≥ 60	ArmaFlex Protect ≥ 1000mm x 26 -52mm	flexible wall & rigid wall	≥ 100	EI 90-C/U
Double solar pipes "NanoSUN²" with intumescent wrap						
DN 16		≥ 60	2x1 layer ArmaProtect FW2 + ≥25mm overlapping (outside, wrap width = 125mm)	flexible wall & rigid wall	≥ 100	EI 90-U/U
DN 40						EI 30-U/U (E 90-U/U)
Multi-layer composite pipes HENCO pipes						
≤ 12	≥ 1,6	≥ 60	lamella mat ≥ 250mm x ≥ 20mm	flexible wall & rigid wall	≥ 100	EI 30-U/C
≤ 32	≥ 3					
≤ 63	≥ 4,5		lamella mat ≥ 250mm x ≥ 30mm			
≤ 12	≥ 1,6		ArmaFlex Protect ≥ 240mm x ≥ 13mm			
≤ 32	≥ 3					EI 90-U/C
≤ 63	≥ 4,5		ArmaFlex Protect ≥ 240mm x ≥ 26mm			EI 30-U/C
Multi-layer composite pipes HENCO pipes with PE-foam insulation						
≤ 12	≥ 1,6	≥ 60	1x1 layer ArmaProtect FW1 + ≥25mm overlapping (centric, wrap width = 100mm) + lamella mat ≥ 250mm x ≥ 20mm	flexible wall & rigid wall	≥ 100	EI 90-U/U
≤ 32	≥ 3					EI 60-U/C (E 90-U/C)
≤ 63	≥ 4,5					

Application in in single board system (1x ≥ 60mm) with ablative coating ArmaProtect ABLC (contd.)

Pipe Ø (mm)	Seal thickness (mm)	Measures	Base material	Base material thickness (mm)	Classification
PVC-U and PVC-C pipes in accordance with ISO 1452 and ISO 15493					
≤ 50	≥ 60	1x1 layer ArmaProtect FW1 (centric, wrap width = 100mm)	flexible wall & rigid wall	≥ 100	EI 90-U/U
≤ 70		1x2 layers ArmaProtect FW1 (centric, wrap width = 100mm)			EI 60-U/U (E 90-U/U)
≤ 90		1x3 layers ArmaProtect FW1 (centric, wrap width = 100mm)			
≤ 110		1x4 layers ArmaProtect FW1 (centric, wrap width = 100mm)			
PE 100 pipes					
≤ 50	≥ 60	1x1 layer ArmaProtect FW1 (centric, wrap width = 100mm)	flexible wall & rigid wall	≥ 100	EI 90-U/U
≤ 70		1x2 layers ArmaProtect FW1 (centric, wrap width = 100mm)			EI 60-U/U (E 90-U/U)
≤ 90		1x3 layers ArmaProtect FW1 (centric, wrap width = 100mm)			
≤ 110		1x4 layers ArmaProtect FW1 (centric, wrap width = 100mm)			
PP-H pipes					
≤ 50	≥ 60	1x1 layer ArmaProtect FW1 (centric, wrap width = 100mm)	flexible wall & rigid wall	≥ 100	EI 90-U/U
≤ 70		1x2 layers ArmaProtect FW1 (centric, wrap width = 100mm)			EI 60-U/U (E 90-U/U)
≤ 90		1x3 layers ArmaProtect FW1 (centric, wrap width = 100mm)			
≤ 110		1x4 layers ArmaProtect FW1 (centric, wrap width = 100mm)			

Floor applications

Application in in single board system (1x ≥ 60mm) with ablative coating ArmaProtect ABLC

Type	Seal thickness (mm)	Measures	Base material	Base material thickness (mm)	Classification
Cable and cable bundles					
Cables Ø ≤ 21mm without cable tray through core drilled holes	≥ 60	ArmaProtect ABLC ≥ 100mm x ≥ 0,75mm dry film thickness	rigid floor	≥ 125	EI 90
Cables Ø ≤ 21mm					EI 60 (E 90)
Cables Ø > 21 - ≤ 50mm		ArmaProtect ABLC ≥ 150mm x ≥ 1mm dry film thickness			
Cables Ø > 50 - ≤ 80mm					
Cable bundles Ø ≤ 100mm		ArmaProtect ABLC ≥ 100mm x ≥ 0,75mm dry film thickness			
		ArmaProtect ABLC ≥ 150mm x ≥ 1mm dry film thickness			EI 60
Cables Ø ≤ 21mm without cable tray through core drilled holes		2x1 layer ArmaProtect FW2 + ≥ 45mm overlapping (outside, wrap width = 125mm)			EI 90
Cables Ø > 21 - ≤ 50mm					EI 60 (E 90)
Cables Ø > 50 - ≤ 80mm					
Cable bundles Ø ≤ 100mm					
Conduits and conduit bundles					
Plastic conduits Ø ≤ 32mm (single or bundled Ø ≤ 100mm, with/without cables Ø ≤ 21mm)	≥ 60	2x2 layers ArmaProtect FW2 (30mm inside, 95mm outside, wrap width = 125mm)	rigid floor	≥ 125	EI 90-U/U
PE lines ("speed pipes" - single "speed pipes" or "speed pipe" bundles, with and without glass fibre cables)					
max. 24 pcs., Ø ≤ 7mm	≥ 60	2x1 layer ArmaProtect FW2 (30mm inside, 95mm outside, wrap width = 125mm)	rigid floor	≥ 125	EI 60-U/U
max. 7 pcs., Ø ≤ 10mm					
max. 5 pcs., Ø ≤ 12mm					
HVAC split line combinations					
Pipe (Ø = 6/10mm) with 9mm PE foam + PVC-U pipe (Ø ≤ 25mm) + 2 cables (Ø ≤ 14mm)	≥ 60	2x2 layers ArmaProtect FW2 (30mm inside, 95mm outside, wrap width = 125mm)	rigid floor	≥ 125	EI 45 (E 90)
Pipe (Ø = 22/22 or Ø = 6 – 22) with 9mm PE foam + PVC-U pipe (Ø ≤ 25mm) + 2 cables (Ø ≤ 21mm)		2x2 layers ArmaProtect FW2 (30mm inside, 95mm outside, wrap width = 125mm) + lamella mat≥ 250mm x ≥ 30mm			EI 90

Application in in single board system (1x ≥ 60mm) with ablative coating ArmaProtect ABLC (contd.)

Pipe Ø (mm)	Pipe wall thickness (mm)	Seal thickness (mm)	Measures	Base material	Base material thickness (mm)	Classification
Copper, steel, stainless steel, cast iron pipes with non-combustible insulation						
≤ 15	≥ 0,8	≥ 60	lamella mat ≥ 250mm x ≥ 20mm	rigid floor	≥ 125	EI 60-C/U
≤ 22	≥ 1		lamella mat ≥ 250mm x ≥ 60mm			
			lamella mat ≥ 500mm x ≥ 20mm			
≤ 54	≥ 1,5		lamella mat ≥ 500mm x ≥ 30mm			
≤ 88,9	≥ 2		lamella mat ≥ 800mm x ≥ 40mm			
Steel, stainless steel, cast iron pipes with non-combustible insulation						
≤ 88,9	≥ 2	≥ 60	lamella mat ≥ 800mm x ≥ 40mm	rigid floor	≥ 125	EI 60-C/U
≤ 114,3	≥ 3,6		lamella mat ≥ 500mm x ≥ 40mm			
≤ 170	≥ 3		lamella mat ≥ 800mm x ≥ 60mm + lamella mat ≥ 500mm x ≥ 30mm*			
≤ 219,1	≥ 5					
* as additional protection						
Copper, steel, stainless steel, cast iron pipes with NH/ArmaFlex insulation						
≤ 15	≥ 0,8	≥ 60	NH/ArmaFlex ≥ 500mm x 13 – 19mm + 2x2 layers ArmaProtect FW2 (30mm inside, 95mm outside, wrap width = 125mm)	rigid floor	≥ 125	EI 90-C/U
			NH/ArmaFlex ≥ 500mm x 19 - 25mm + 1x2 layers ArmaProtect FW2 (60mm inside, 65mm outside, above, wrap width = 125mm)			EI 60-C/U (E 90-C/U)
≤ 28	≥ 1		NH/ArmaFlex ≥ 750mm x 19 – 25mm+ 2x2 layers ArmaProtect FW2 (30mm inside, 95mm outside, wrap width = 125mm)			EI 90-C/U
			NH/ArmaFlex ≥ 750mm x 25mm+ 1x2 layers ArmaProtect FW2 (60mm inside, 65mm outside, above, wrap width = 125mm)			EI 60-C/U (E 90-C/U)
≤ 54	≥ 1,5		NH/ArmaFlex ≥ 1000mm x 28 – 57mm+ 1x1 layer ArmaProtect FW2 (60mm inside, 65mm outside, above, wrap width = 125mm) + lamella mat ≥ 500mm x ≥ 30mm*			EI 90-C/U
≤ 88,9	≥ 2		NH/ArmaFlex ≥ 1000mm x 25 - 88mm+ 1x2 layers ArmaProtect FW2 (60mm inside, 65mm outside, above, wrap width = 125mm) + lamella mat ≥ 500mm x ≥ 40mm*			
			NH/ArmaFlex ≥ 1000mm x 89mm + 1x2 layers ArmaProtect FW2 (60mm inside, 65mm outside, above, wrap width = 125mm) + lamella mat ≥ 500mm x ≥ 30mm*			

Application in in single board system (1x ≥ 60mm) with ablative coating ArmaProtect ABLC (contd.)

Pipe Ø (mm)	Pipe wall thickness (mm)	Seal thickness (mm)	Measures	Base material	Base material thickness (mm)	Classification
Copper, steel, stainless steel, cast iron pipes with NH/ArmaFlex insulation (contd.)						
≤ 108	≥ 2,5	≥ 60	NH/ArmaFlex ≥ 1000mm x 57mm + 1x2 layers ArmaProtect FW2 (60mm inside, 65mm outside, above, wrap width = 125mm) + lamella mat ≥ 750mm x ≥ 40mm*	rigid floor	≥ 125	EI 90-C/U
			NH/ArmaFlex ≥ 1000mm x 58 - 89mm + 1x2 layers ArmaProtect FW2 (60mm inside, 65mm outside, above, wrap width = 125mm) + lamella mat ≥ 750mm x ≥ 40mm*			EI 60-C/U
* as additional protection						
Steel, stainless steel, cast iron pipes with NH/ArmaFlex insulation						
≤ 108	≥ 2,5	≥ 60	NH/ArmaFlex ≥ 1000mm x 25mm + 1x2 layers ArmaProtect FW2 (60mm inside, 65mm outside, above, wrap width = 125mm) + lamella mat ≥ 1000mm x ≥ 40mm*	rigid floor	≥ 125	EI 90-C/U
			NH/ArmaFlex ≥ 1000mm x 26 - 85mm + 1x2 layers ArmaProtect FW2 (60mm inside, 65mm outside, above, wrap width = 125mm) + lamella mat ≥ 1000mm x ≥ 40mm*			EI 60-C/U
* as additional protection						
Copper, steel, stainless steel, cast iron pipes with NH/ArmaFlex insulation						
≤ 88,9	≥ 0,8	≥ 60	ArmaFlex Protect ≥ 500mm x 25 -51mm	rigid floor	≥ 125	EI 60-C/U (E 90-C/U)
Steel, stainless steel, cast iron pipes with NH/ArmaFlex insulation						
≤ 170	≥ 3	≥ 60	ArmaFlex Protect ≥ 1000mm x 26 - 52mm	rigid floor	≥ 125	EI 60-C/U (E 90-C/U)
Double solar pipes "NanoSUN²" with intumescent wrap						
DN 16		≥ 60	2x1 layer ArmaProtect FW2 + ≥ 25mm overlapping (outside, wrap width = 125mm)	rigid floor	≥ 125	EI 60-U/U
DN 40						
Multi-layer composite pipes HENCO pipes						
≤ 12	≥ 1,6	≥ 60	lamella mat ≥ 250mm x ≥ 20mm	rigid floor	≥ 125	EI 90-U/C
≤ 32	≥ 3					
≤ 63	≥ 4,5		lamella mat ≥ 250mm x ≥ 30mm			
≤ 12	≥ 1,6		ArmaFlex Protect ≥ 240mm x ≥ 13mm			
≤ 32	≥ 3					
≤ 63	≥ 4,5		ArmaFlex Protect ≥ 240mm x ≥ 26mm			

Application in in single board system (1x ≥ 60mm) with ablative coating ArmaProtect ABLC (contd.)

Pipe Ø (mm)	Pipe wall thickness (mm)	Seal thickness (mm)	Measures	Base material	Base material thickness (mm)	Classification
Multi-layer composite pipes HENCO pipes with PE-foam insulation						
≤ 12	≥ 1,6	≥ 60	1x1 layer ArmaProtect FW1 + ≥25mm overlapping (centric, wrap width = 100mm) + lamella mat ≥ 250mm x ≥ 20mm	rigid floor	≥ 125	EI 90-U/U
≤ 32	≥ 3					
≤ 63	≥ 4,5					
Uponor MLC pipe white S						
110	10	≥ 60	lamella mat ≥ 250mm x ≥ 20mm	rigid floor	≥ 125	EI 60-U/C (E 90-U/C)
			ArmaFlex Protect ≥ 240mm x ≥ 26mm			EI 60-U/C

Pipe Ø (mm)	Seal thickness (mm)	Measures	Base material	Base material thickness (mm)	Classification
PVC-U and PVC-C pipes in accordance with ISO 1452 and ISO 15493					
≤ 50	≥ 60	1x1 layer ArmaProtect FW1 (centric, wrap width = 100mm)	rigid floor	≥ 125	EI 90-U/U
≤ 70		1x2 layers ArmaProtect FW1 (centric, wrap width = 100mm)			EI 45-U/U (E 90-U/U)
≤ 90		1x3 layers ArmaProtect FW1 (centric, wrap width = 100mm)			
≤ 110		1x4 layers ArmaProtect FW1 (centric, wrap width = 100mm)			
PE 100 pipes					
≤ 50	≥ 60	1x1 layer ArmaProtect FW1 (centric, wrap width = 100mm)	rigid floor	≥ 125	EI 90-U/U
≤ 70		1x2 layers ArmaProtect FW1 (centric, wrap width = 100mm)			EI 60-U/U (E 90-U/U)
≤ 90		1x3 layers ArmaProtect FW1 (centric, wrap width = 100mm)			
≤ 110		1x4 layers ArmaProtect FW1 (centric, wrap width = 100mm)			
PP-H pipes					
≤ 50	≥ 60	1x1 layer ArmaProtect FW1 (centric, wrap width = 100mm)	rigid floor	≥ 125	EI 90-U/U
≤ 70		1x2 layers ArmaProtect FW1 (centric, wrap width = 100mm)			
≤ 90		1x3 layers ArmaProtect FW1 (centric, wrap width = 100mm)			
≤ 110		1x4 layers ArmaProtect FW1 (centric, wrap width = 100mm)			

Applications - Double board system (2 x ≥ 60mm)

Application of double board system (2 x ≥ 60mm) with ablative coating ArmaProtect ABLC in flexible wall and rigid wall (design variants)

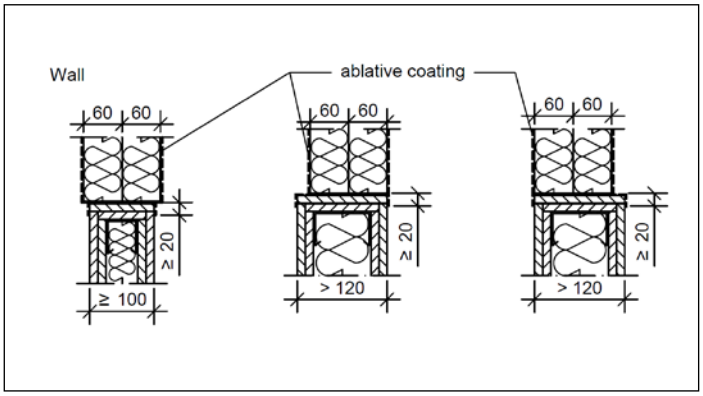

Legend

Dimensions in mm

Application of double board system (2 x ≥ 60mm) with ablative coating ArmaProtect ABLC in rigid floor (design variants)

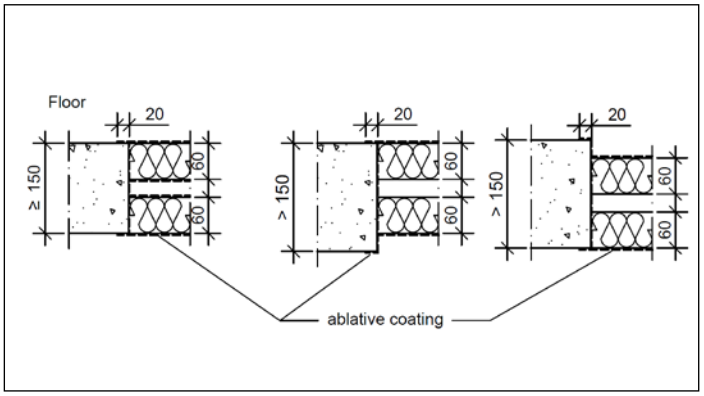

Legend

Dimensions in mm

Application with cables, cable bundles and cable trays with ablative coating ArmaProtect ABLC or intumescent wrap in double board system (2 x ≥ 60mm) in flexible wall, rigid wall and rigid floor

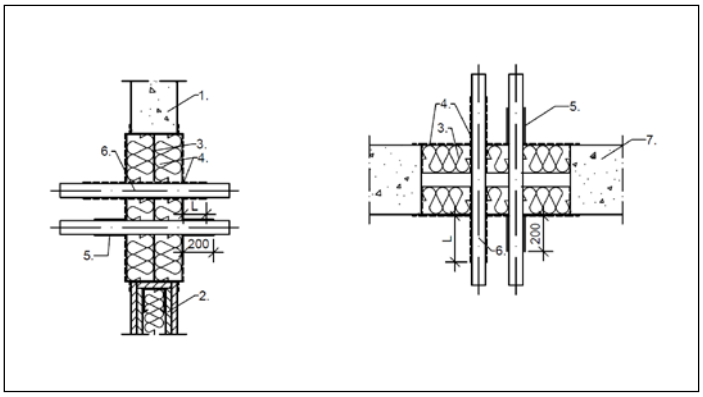

Legend

1. rigid wall ≥ 100mm
2. flexible wall ≥ 100mm
3. mineral wool board
4. ablative coating ArmaProtect ABLC
5. intumescent wrap ArmaProtect FW2
6. cables / cable bundles / cable trays
7 rigid floor ≥ 150mm

Dimensions in mm

Application with conduit and conduit bundles with intumescent wrap in double board system (2 x ≥ 60mm) in flexible wall, rigid wall and rigid floor

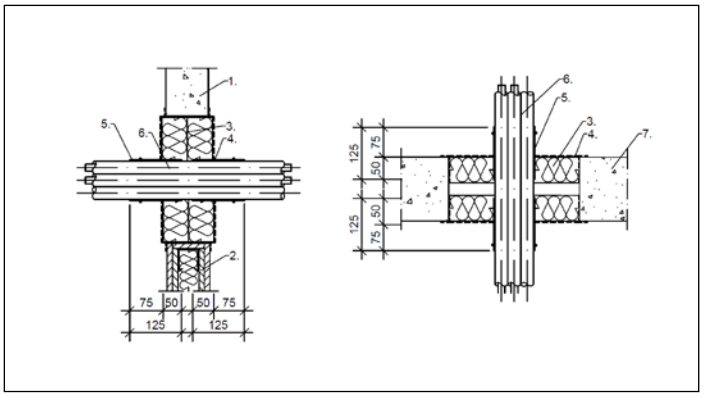

Legend

1. rigid wall ≥ 100mm
2. flexible wall ≥ 100mm
3. mineral wool board
4. ablative coating ArmaProtect ABLC
5. intumescent wrap ArmaProtect FW2
6. conduit / conduit bundles
7. rigid floor ≥ 150mm

Dimensions in mm

Application with PE lines "speed pipes" and "speed pipe" bundles with intumescent wrap in double board system (2 x ≥ 60mm) in flexible wall and rigid wall

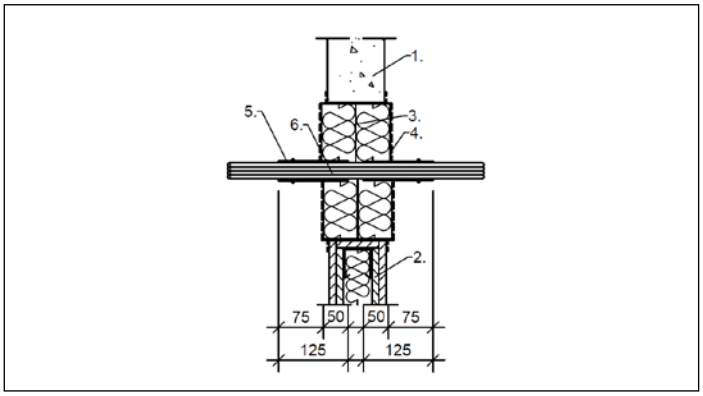

Legend

1. rigid wall ≥ 100mm
2. flexible wall ≥ 100mm
3. mineral wool board
4. ablative coating ArmaProtect ABLC
5. intumescent wrap ArmaProtect FW2
6. speed pipes / speed pipe bundles

Dimensions in mm

Application with HVAC split line combinations in double board system (2 x ≥ 60mm) with intumescent wrap in flexible wall, rigid wall and rigid floor

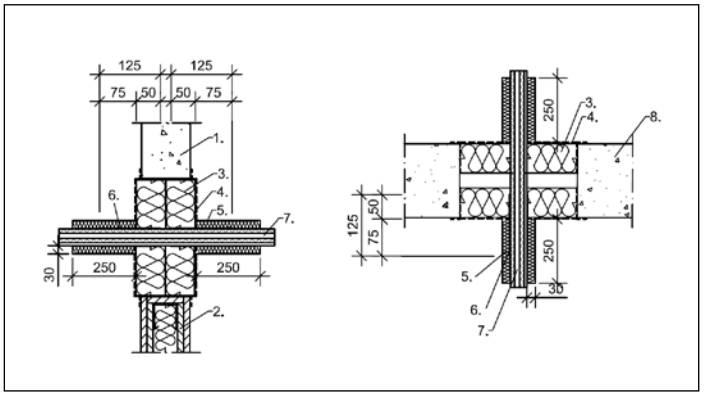

Legend

1. rigid wall ≥ 100mm
2. flexible wall ≥ 100mm
3. mineral wool board
4. ablative coating ArmaProtect ABLC
5. lamella mat
6. intumescent wrap ArmaProtect FW2
7. HVAC split line combination
8. rigid floor ≥ 150mm

Dimensions in mm

Application with non-combustible pipes with non-combustible insulation in double board system (2 x ≥ 60mm) in flexible wall, rigid wall and rigid floor

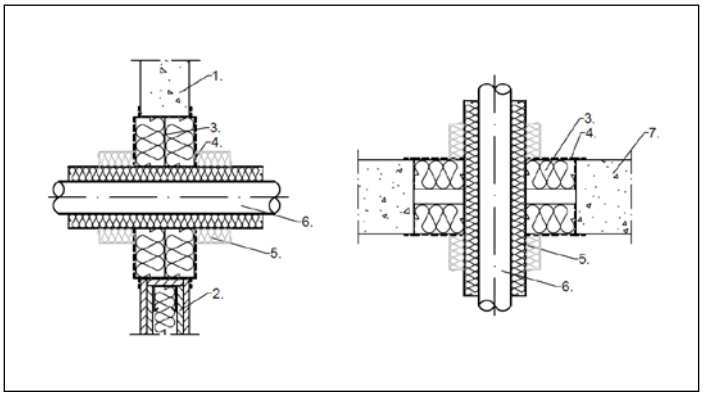

Legend

1. rigid wall ≥ 100mm
2. flexible wall ≥ 100mm
3. mineral wool board
4. ablative coating ArmaProtect ABLC
5. lamella mat
6. non-combustible pipes
7. rigid floor ≥ 150mm

Dimensions in mm

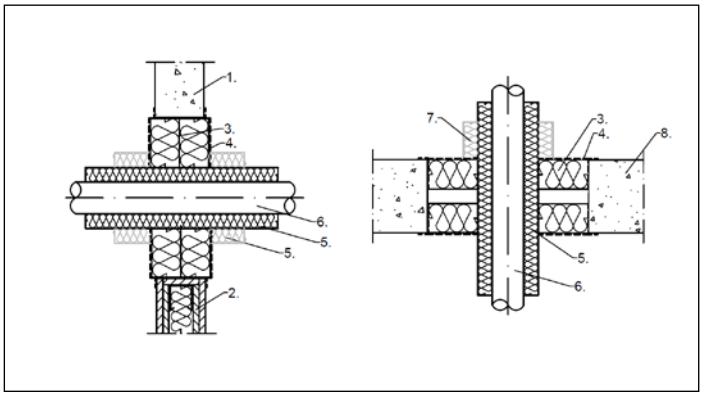

Legend

1. rigid wall ≥ 100mm
2. flexible wall ≥ 100mm
3. mineral wool board
4. ablative coating ArmaProtect ABLC
5. lamella mat
6. non-combustible pipes
7. lamella mat
8. rigid floor ≥ 150mm

Dimensions in mm

Applications - Double board system (2 x ≥ 60mm) (contd.)

Application with non-combustible pipes with combustible insulation and intumescent wrap in double board system (2 x ≥ 60mm) with intumescent wrap in flexible wall, rigid wall and rigid floor

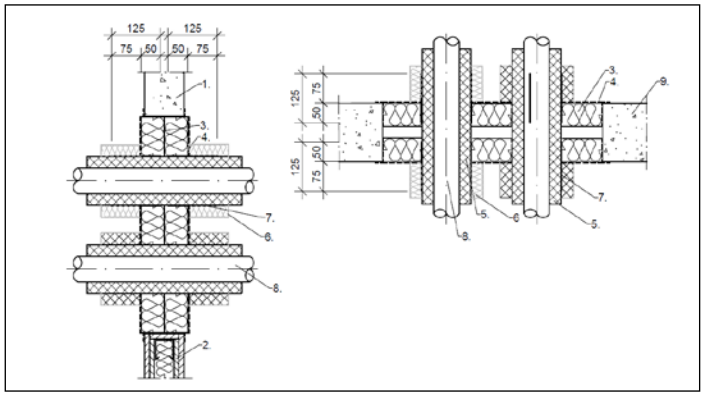

Legend

1. rigid wall ≥ 100mm
2. flexible wall ≥ 100mm
3. mineral wool board
4. ablative coating ArmaProtect ABLC
5. FEF insulation
6. additional protection with lamella mat
7. intumescent wrap ArmaProtect FW2
8. non-combustible pipes
9. rigid floor ≥ 150mm

Dimensions in mm

Application with non-combustible pipes with ArmaFlex Protect insulation in double board system (2 x ≥ 60mm) with ArmaFlex Protect in flexible wall, rigid wall and rigid floor

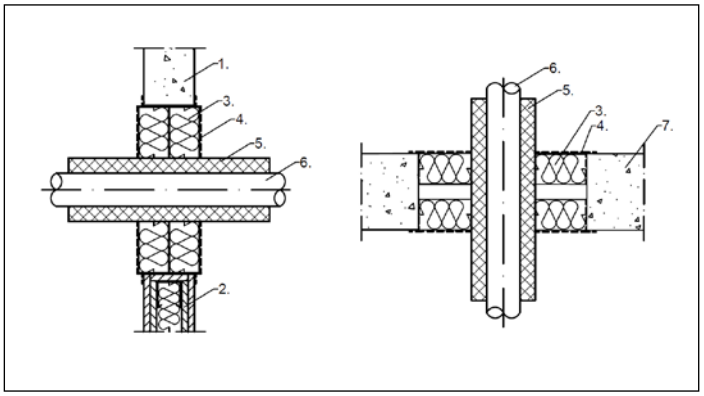

Legend

1. rigid wall ≥ 100mm
2. flexible wall ≥ 100mm
3. mineral wool board
4. ablative coating ArmaProtect ABLC
5. ArmaFlex Protect
6. non-combustible pipes
7. rigid floor ≥ 150mm

Dimensions in mm

Application with solar pipes "NanoSUN2" in double board system (2 x ≥ 60mm) with intumescent wrap in flexible wall, rigid wall and rigid floor

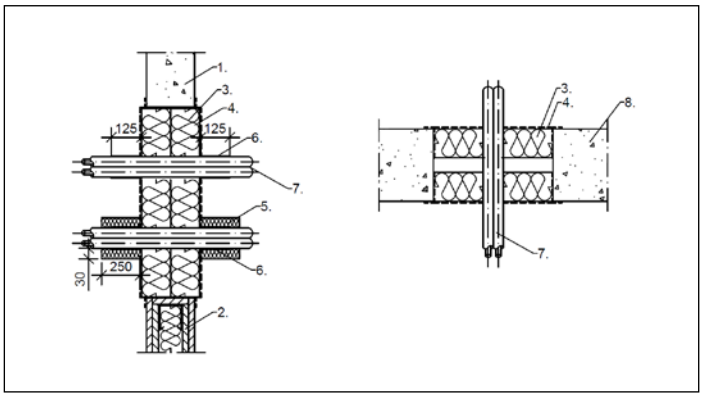

Legend

1. rigid wall ≥ 100mm
2. flexible wall ≥ 100mm
3. mineral wool board
4. ablative coating ArmaProtect ABLC
5. lamella mat
6. intumescent wrap ArmaProtect FW2
7. double solar pipes "NanoSUN²"
8. rigid floor ≥ 150mm

Dimensions in mm

Application with multi-layer composite pipes in double board system (2 x ≥ 60mm) in flexible wall, rigid wall and rigid floor

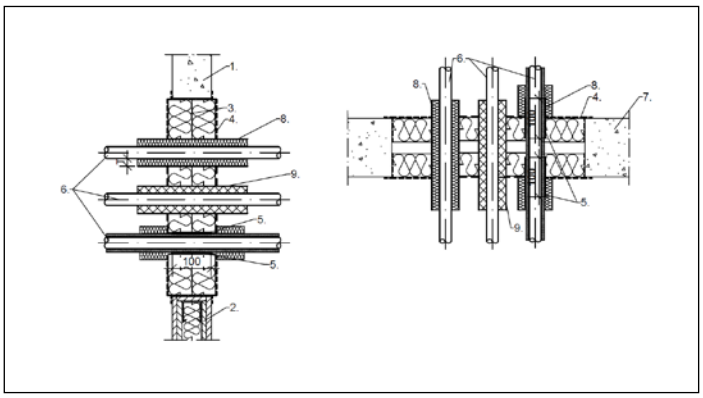

Legend

1. rigid wall ≥ 100mm
2. flexible wall ≥ 100mm
3. mineral wool board
4. ablative coating ArmaProtect ABLC
5. intumescent wrap ArmaProtect FW1
6. multi-layer composite pipe
7. rigid floor ≥ 150mm
8. lamella mat
9. FEF insulation

Dimensions in mm

Application with combustible pipes in double board system (2 x ≥60mm) with intumescent wrap in flexible wall, rigid wall and rigid floor

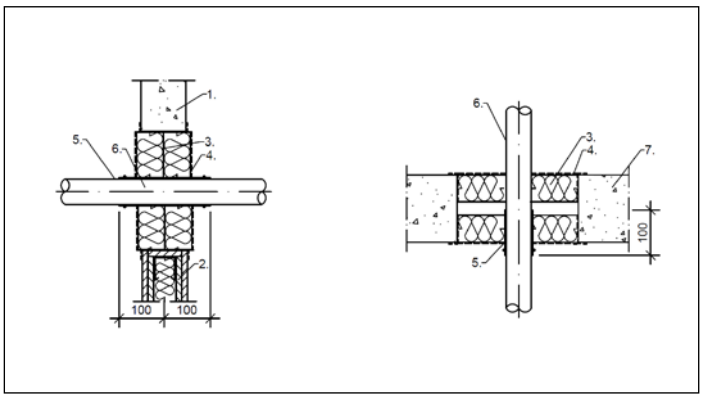

Legend

1. rigid wall ≥ 100mm
2. flexible wall ≥ 100mm
3. mineral wool board
4. ablative coating ArmaProtect ABLC
5. intumescent wrap ArmaProtect FW1
6. combustible pipe
7. rigid floor ≥ 150mm

Dimensions in mm

Resistance to Fire - Double board system (2 x ⩾ 60mm)

Wall applications

Application in in double board system (2 x ⩾ 60mm) with ablative coating ArmaProtect ABLC

Type	Seal thickness (mm)	Measures	Base material	Base material thickness (mm)	Classification
Cable and cable bundles					
Cables Ø ⩽ 21mm without cable tray through core drilled holes	⩾ 120	ArmaProtect ABLC ⩾ 200mm x ⩾ 1mm dry film thickness	flexible wall & rigid wall	⩾ 100	EI 120
		2x2 layers ArmaProtect FW2 + 45 - 60mm overlapping (outside, wrap width = 200mm)			
Cables Ø ⩽ 21mm		ArmaProtect ABLC ⩾ 100mm x ⩾ 1mm dry film thickness			
Cables Ø > 21 - ⩽ 50mm		ArmaProtect ABLC ⩾ 200mm x ⩾ 2mm dry film thickness			
Cables Ø > 50 - ⩽ 80mm		ArmaProtect ABLC ⩾ 250mm x ⩾ 1mm dry film thickness			
		2x2 layers ArmaProtect FW2 + 45 - 60mm overlapping (outside, wrap width = 200mm)			
Cable bundles Ø ⩽ 100mm		ArmaProtect ABLC ⩾100mm x ⩾ 1mm dry film thickness			
		2x2 layers ArmaProtect FW2 + 45 - 60mm overlapping (outside, wrap width = 200mm)			
Conduits and conduit bundles					
Plastic conduits Ø ⩽ 32mm (with/without cables Ø ⩽ 21mm)	⩾ 120	2x2 layers ArmaProtect FW2 (50mm inside, 75mm outside, wrap width = 125mm)	flexible wall & rigid wall	⩾ 100	EI 90-U/U
		2x3 layers ArmaProtect FW2 (50mm inside, 75mm outside, wrap width = 125mm)			EI 120-U/U
Plastic conduit bundles Ø ⩽ 100mm with conduits Ø ⩽ 32mm (with/without cables Ø ⩽ 21mm)		2x2 layers ArmaProtect FW2 (50mm inside, 75mm outside, wrap width = 125mm)			EI 90-U/U
PE lines ("speed pipes" -single "speed pipes" or "speed pipe" bundles, with and without glass fibre cables)					
max. 24 pcs., Ø ⩽ 7mm	⩾ 120	2x2 layers ArmaProtect FW2 (50mm inside, 75mm outside, wrap width = 125mm)	flexible wall & rigid wall	⩾ 100	EI 120-U/C
max. 7 pcs., Ø ⩽ 10mm					
max. 5 pcs., Ø ⩽ 12mm					
HVAC split line combinations					
Double pipe (Ø = 6 – 10mm/ 6 - 18mm) or single copper pipe (Ø = 6 – 22mm) + PVC-U pipe (Ø ⩽ 21mm) + 5 cables (Ø ⩽ 21mm)	⩾ 120	2 x 1 layer ArmaProtect FW2 (50mm inside, 75mm outside, wrap width = 125mm) + lamella mat ⩾ 250mm x ⩾ 30mm*	flexible wall & rigid wall	⩾ 100	EI 120-U/U

* as additional protection

Application in in double board system (2 x ≥ 60mm) with ablative coating ArmaProtect ABLC (contd.)

Pipe Ø (MM)	Seal thickness (mm)	Measures	Base material	Base material thickness (mm)	Classification
Copper, steel, stainless steel, cast iron pipes with non-combustible insulation					
≤ 15	≥ 120	lamella mat ≥ 250mm x ≥ 20mm	flexible wall & rigid wall	≥ 100	EI 120-C/U
≤ 28		lamella mat ≥ 500mm x ≥ 20mm			
≤ 42		lamella mat ≥ 500mm x ≥ 30mm			
≤ 54		lamella mat ≥ 750mm x ≥ 40mm + lamella mat ≥ 500mm x ≥ 30mm*			
≤ 88,9		lamella mat ≥ 1000mm x ≥ 30mm + lamella mat ≥ 500mm x ≥ 30mm*			
≤ 108		lamella mat ≥ 1000mm x ≥ 30mm			
≤ 22		lamella mat ≥ 1000mm x ≥ 40mm			EI 90-C/U (E 120-C/U)
≤ 54					
≤ 88,9					EI 60-C/U (E 120-C/U)
* as additional protection					
Steel, stainless steel, cast iron pipes with non-combustible insulation					
≤ 114,3	≥ 120	lamella mat ≥ 1000mm x ≥ 30mm + lamella mat ≥ 500mm x ≥ 30mm*	flexible wall & rigid wall	≥ 100	EI 120-C/U
≤ 170		lamella mat ≥ 1000mm x ≥ 40mm + lamella mat ≥ 500mm x ≥ 60mm*			
		lamella mat ≥ 1000mm x ≥ 60mm + lamella mat ≥ 500mm x ≥ 30mm*			
		lamella mat ≥ 1000mm x ≥ 40mm			EI 60-C/U (E 120-C/U)
* as additional protection					
Copper, steel, stainless steel, cast iron pipes with NH/ArmaFlex insulation					
≤ 10	≥ 120	NH/ArmaFlex ≥ 500mm x 9 – 19mm + 2x1 layer ArmaProtect FW2 (50mm inside, 75mm outside, wrap width = 125mm) + lamella mat ≥ 250mm x ≥ 20mm*	flexible wall & rigid wall	≥ 100	EI 120-C/U
≤ 15		NH/ArmaFlex ≥ 750mm x 9 – 25mm + 2x1 layer ArmaProtect FW2 (50mm inside, 75mm outside, wrap width = 125mm) + lamella mat ≥ 250mm x ≥ 20mm*			EI 90-C/U (E 120-C/U)
		NH/ArmaFlex ≥ 750mm x 9 – 19 + ArmaFlex Protect ≥ 250mm x ≥ 13mm*			EI 120-C/U
		NH/ArmaFlex continuous insulation x 9 - 50mm + 2x1 layer ArmaProtect FW2 (50mm inside, 75mm outside, wrap width = 125mm) + lamella mat≥ 250mm x ≥ 20mm*			

Application in in double board system (2 x ≥ 60mm) with ablative coating ArmaProtect ABLC (contd.)

Pipe Ø (mm)	Seal thickness (mm)	Measures	Base material	Base material thickness (mm)	Classification
Copper, steel, stainless steel, cast iron pipes with NH/ArmaFlex insulation (contd.)					
≤ 28	≥ 120	NH/ArmaFlex ≥ 750mm x 9 – 25mm + 2x1 layer ArmaProtect FW2 (50mm inside, 75mm outside, wrap width = 125mm) + lamella mat ≥ 250mm x ≥ 20mm*	flexible wall & rigid wall	≥ 100	EI 90-C/U (E 120-C/U)
		NH/ArmaFlex continuous insulation x 10 - 50mm + 2x1 layer ArmaProtect FW2 (50mm inside, 75mm outside, wrap width = 125mm) + lamella mat≥ 500mm x ≥ 20mm*			EI 120-C/U
		NH/ArmaFlex continuous insulation x 89mm + 2x1 layer ArmaProtect FW2 (50mm inside, 75mm outside, wrap width = 125mm) + lamella mat≥ 500mm x ≥ 40mm*			
≤ 42		NH/ArmaFlex ≥ 750mm x 10 – 50mm + 2x1 layer ArmaProtect FW2 (50mm inside, 75mm outside, wrap width = 125mm) + lamella mat ≥ 250mm x ≥ 20mm*			
		NH/ArmaFlex ≥ 750mm x 10 – 50 + 2x1 layer ArmaProtect FW2 (50mm inside, 75mm outside, wrap width = 125mm) + ArmaFlex Protect ≥ 250mm x 2x13mm*			
		NH/ArmaFlex continuous insulation x 89mm + 2x1 layer ArmaProtect FW2 (50mm inside, 75mm outside, wrap width = 125mm) + lamella mat≥ 500mm x ≥ 40mm*			
≤ 54		NH/ArmaFlex ≥ 1000mm x 25mm + 2x1 layer ArmaProtect FW2 (50mm inside, 75mm outside, wrap width = 125mm) + lamella mat ≥ 250mm x ≥ 20mm*			EI 90-C/U (E 120-C/U)
		NH/ArmaFlex continuous insulation x 25mm + 2x1 layer ArmaProtect FW2 (50mm inside, 75mm outside, wrap width = 125mm) + lamella mat ≥ 250mm x ≥ 20mm*			EI 120-C/U
		NH/ArmaFlex ≥ 1000mm x 29 - 57mm + 2x1 layer ArmaProtect FW2 (50mm inside, 75mm outside, wrap width = 125mm) + lamella mat ≥ 500mm x ≥ 30mm*			EI 90-C/U
		NH/ArmaFlex continuous insulation x 25mm + 2x1 layer ArmaProtect FW2 (50mm inside, 75mm outside, wrap width = 125mm) + lamella mat ≥ 500mm x ≥ 40mm*			EI 120-C/U

* as additional protection

Application in in double board system (2 x ≥ 60mm) with ablative coating ArmaProtect ABLC (contd.)

Pipe Ø (mm)	Seal thickness (mm)	Measures	Base material	Base material thickness (mm)	Classification
Copper, steel, stainless steel, cast iron pipes with NH/ArmaFlex insulation (contd.)					
≤ 88,9	≥ 120	NH/ArmaFlex ≥ 1000mm x 25 - 89mm + 2x1 layer ArmaProtect FW2 (50mm inside, 75mm outside, wrap width = 125mm) + lamella mat ≥ 500mm x ≥ 40mm*	flexible wall & rigid wall	≥ 100	EI 90-C/U
		NH/ArmaFlex continuous insulation x 89mm + 2x1 layer ArmaProtect FW2 (50mm inside, 75mm outside, wrap width = 125mm) + lamella mat≥ 250mm x ≥ 40mm*			EI 120-C/U
≤108		NH/ArmaFlex ≥ 1000mm x 57mm + 2x1 layer ArmaProtect FW2 (50mm inside, 75mm outside, wrap width = 125mm) + lamella mat≥ 750mm x ≥ 40mm*			EI 90-C/U

* as additional protection

Steel, stainless steel, cast iron pipes with NH/ArmaFlex insulation					
≤ 170	≥ 120	NH/ArmaFlex ≥ 1000mm x 50 - 89mm + 2x1 layer ArmaProtect FW2 (50mm inside, 75mm outside, wrap width = 125mm) + lamella mat ≥ 750mm x ≥ 60mm*	flexible wall & rigid wall	≥ 100	EI 120-C/U

* as additional protection

Copper, steel, stainless steel, cast iron pipes with Kaiflex ST insulation					
≤ 8	≥ 120	Kaiflex ST ≥ 2000mm x 9 – 18mm + 2x1 layer ArmaProtect FW2 (50mm inside, 75mm outside, wrap width = 125mm)	flexible wall & rigid wall	≥ 100	EI 120-C/U
≤ 22		Kaiflex ST ≥ 2000mm x 32mm+ 2x2 layers ArmaProtect FW2 (50mm inside, 75mm outside, wrap width = 125mm)			
≤ 88,9		Kaiflex ST ≥ 2000mm x 32mm + 2x2 layers ArmaProtect FW2 (50mm inside, 75mm outside, wrap width = 125mm) + lamella mat ≥ 500mm x ≥ 30mm*			

* as additional protection

Steel, stainless steel, cast iron pipes with Kaiflex ST insulation					
≤ 170	≥ 120	Kaiflex ST ≥ 2000mm x 10 – 32mm + 2x2 layers ArmaProtect FW2 (50mm inside, 75mm outside, wrap width = 125mm) + lamella mat ≥ 500mm x ≥ 30mm*	flexible wall & rigid wall	≥ 100	EI 90-C/U (E 120-C/U)

* as additional protection

Application in in double board system (2 x ≥ 60mm) with ablative coating ArmaProtect ABLC (contd.)

Pipe Ø (mm)	Seal thickness (mm)	Measures	Base material	Base material thickness (mm)	Classification
Copper, steel, stainless steel, cast iron pipes with ArmaFlex Protect insulation					
≤ 10	≥ 120	ArmaFlex Protect ≥ 1000mm x 16 mm	flexible wall & rigid wall	≥ 100	EI 120-C/U
≤ 15		ArmaFlex Protect ≥ 1000mm x 19 mm			EI 90-C/U (E 120-C/U)
≤ 22		ArmaFlex Protect ≥ 1000mm x 20 mm			EI 120-C/U
≤ 28		ArmaFlex Protect ≥ 1000mm x 25 mm			EI 60-C/U (E 120-C/U)
≤ 35					EI 90-C/U (E 120-C/U)
≤ 54					
≤ 88,9					EI 60-C/U (E 120-C/U)

* as additional protection

Steel, stainless steel, cast iron pipes with ArmaFlex Protect insulation					
≤ 170	≥ 120	ArmaFlex Protect ≥ 1000mm x 2x13mm	flexible wall & rigid wall	≥ 100	EI 90-C/U (E 120-C/U)
Double solar pipes "NanoSUN²" with intumescent wrap					
DN 35	≥ 120	2x1 layer ArmaProtect FW2 (outside, wrap width = 125mm)	flexible wall & rigid wall	≥ 100	EI 120-C/U
DN 40		2x1 layer ArmaProtect FW2 + 25mm overlapping (outside, wrap width = 125mm)			EI 60-U/U (E 90-U/U)
		2x1 layer ArmaProtect FW2 + 25mm overlapping (outside, wrap width = 125mm) + lamella mat ≥ 250mm x ≥ 30mm*			EI 120-U/U

* as additional protection

Pipe Ø (mm)	Pipe wall thickness (mm)	Seal thickness (mm)	Measures	Base material	Base material thickness (mm)	Classification
Multi-layer composite pipes HENCO pipes						
≤ 32	≥ 3,0	≤ 120	lamella mat ≥ 250mm x ≥ 20mm	flexible wall & rigid wall	≥ 100	EI 120-U/C
≤ 63	≥ 4,5		lamella mat ≥ 250mm x ≥ 30mm			
≤ 12	≥ 1,6		ArmaFlex Protect ≥ 240mm x ≥ 13mm			
≤ 63	≥ 4,5		ArmaFlex Protect ≥ 240mm x ≥ 26mm			
Multi-layer composite pipes HENCO pipes with PE-foam insulation						
≤ 14 (PE, 6mm)	-	≤ 120	2x1 layer ArmaProtect FW1 + ≥ 25mm overlapping (60mm inside, 40mm outside, wrap width = 100mm)) + lamella mat ≥ 250mm x ≥ 20mm	flexible wall & rigid wall	≥ 100	EI 120-U/U
≤ 26 (PE, 13mm)						
≤ 32 (PE, 6 -10mm)						

Application in in double board system (2 x ≥ 60mm) with ablative coating ArmaProtect ABLC (contd.)

Pipe Ø (mm)	Seal thickness (mm)	Measures	Base material	Base material thickness (mm)	Classification
PVC-U and PVC-C pipes in accordance with ISO 1452 and ISO 15493					
≤ 50	≥ 120	2x1 layer ArmaProtect FW1 (below, 60mm inside, 40mm outside, wrap width = 100mm)	flexible wall & rigid wall	≥ 100	EI 120-U/U
≤ 80		2x2 layers ArmaProtect FW1 (below, 60mm inside, 40mm outside, wrap width = 100mm)			
≤ 110		2x3 layers ArmaProtect FW1 (below, 60mm inside, 40mm outside, wrap width = 100mm)			
≤ 160		2x4 layers ArmaProtect FW1 (below, 60mm inside, 40mm outside, wrap width = 100mm)			EI 120-U/C
PE 100 pipes					
≤ 50	≥ 120	2x1 layer ArmaProtect FW1 (below, 60mm inside, 40mm outside, wrap width = 100mm)	flexible wall & rigid wall	≥ 100	EI 120-U/U
≤ 80		2x2 layers ArmaProtect FW1 (below, 60mm inside, 40mm outside, wrap width = 100mm)			
≤ 110		2x3 layers ArmaProtect FW1 (below, 60mm inside, 40mm outside, wrap width = 100mm)			
≤ 160		2x4 layers ArmaProtect FW1 (below, 60mm inside, 40mm outside, wrap width = 100mm)			EI 120-U/C
PP-H pipes					
≤ 50	≥ 120	2x1 layer ArmaProtect FW1 (below, 60mm inside, 40mm outside, wrap width = 100mm)	flexible wall & rigid wall	≥ 100	EI 120-U/U
≤ 80		2x2 layers ArmaProtect FW1 (below, 60mm inside, 40mm outside, wrap width = 100mm)			
≤ 110		2x3 layers ArmaProtect FW1 (below, 60mm inside, 40mm outside, wrap width = 100mm)			
≤ 160		2x4 layers ArmaProtect FW1 (below, 60mm inside, 40mm outside, wrap width = 100mm)			EI 120-U/C

Floor applications

Application in in double board system (2 x ≥60mm) with ablative coating ArmaProtect ABLC

Type	Seal thickness (mm)	Measures	Base material	Base material thickness (mm)	Classification
Cable and cable bundles					
Cables Ø ≤ 21mm without cable tray through core drilled holes	≥ 120	2x2 layers ArmaProtect FW2 + 45 - 60mm overlapping (outside, wrap width = 200mm)	rigid floor	≥ 150	EI 120
Cables Ø ≤ 21mm		ArmaProtect ABLC ≥ 250mm x ≥ 1mm dry film thickness			
Cables Ø > 21 - ≤ 50mm		ArmaProtect ABLC ≥ 250mm x ≥ 2mm dry film thickness			
Cables Ø > 50 - ≤ 80mm		2x2 layers ArmaProtect FW2 + 45 - 60mm overlapping (outside, wrap width = 200mm)			
Cable bundles Ø ≤ 100mm		ArmaProtect ABLC ≥ 250mm x ≥ 1mm dry film thickness			
		2x2 layers ArmaProtect FW2 + 45 - 60mm overlapping (outside, wrap width = 200mm)			
Conduits and conduit bundles					
Plastic conduits Ø ≤ 32mm (with/without cables Ø ≤ 21mm)	≥ 120	2x2 layers ArmaProtect FW2 (50mm inside, 75mm outside, wrap width = 125mm)	rigid floor	≥ 150	EI 90-U/U
Plastic conduit bundles Ø ≤ 100mm with conduits Ø ≤ 32mm (with/without cables Ø ≤ 21mm)					
HVAC split line combinations					
Double pipe (Ø = 6 – 22mm/ 8 - 22mm) or single copper pipe (Ø = 6 – 22mm) + PVC-U pipe (Ø ≤ 25mm) + 4 cables (Ø ≤ 21mm)	≥ 120	2x1 layer ArmaProtect FW2 (50mm inside, 75mm outside, wrap width = 125mm) + lamella mat ≥ 250mm x ≥ 30mm*	rigid floor	≥ 150	EI 90-U/U

* as additional protection

Application in in double board system (2 x ≥60mm) with ablative coating ArmaProtect ABLC (contd.)

Pipe Ø (mm)	Seal thickness (mm)	Measures	Base material	Base material thickness (mm)	Classification
Copper, steel, stainless steel, cast iron pipes with ArmaFlex Protect insulation					
≤ 28	≥ 120	lamella mat ≥ 500mm x ≥ 20mm	rigid floor	≥ 150	EI 120-C/U
≤ 42		lamella mat ≥ 500mm x ≥ 30mm			EI 60-C/U
≤ 54		lamella mat ≥ 750mm x ≥ 40mm + lamella mat ≥ 500mm x ≥ 30mm*			EI 120-C/U
		lamella mat ≥ 750mm x ≥ 30mm + lamella mat ≥ 500mm x ≥ 30mm			
≤ 88,9		lamella mat ≥ 750mm x ≥ 40mm + lamella mat ≥ 500mm x ≥ 30mm*			
		lamella mat ≥ 750mm x ≥ 30mm + lamella mat ≥ 500mm x ≥ 30mm			
≤ 108		lamella mat ≥ 1000mm x ≥ 30mm + lamella mat ≥ 500mm x ≥ 30mm*			
≤ 22		lamella mat ≥ 1000mm x ≥ 40mm+ only above lamella mat ≥ 500mm x ≥ 30mm*			
≤ 54		lamella mat ≥ 1000mm x ≥ 40mm+ only above lamella mat ≥ 500mm x ≥ 30mm*			
≤ 88,9		lamella mat ≥ 1000mm x ≥ 30mm+ only above lamella mat ≥ 500mm x ≥ 30mm*			
Steel, stainless steel, cast iron pipes with non-combustible insulation					
≤ 114,3	≥ 120	lamella mat ≥ 1000mm x ≥ 30mm + lamella mat ≥ 500mm x ≥ 30mm*	rigid floor	≥ 150	EI 120-C/U
≤ 170		lamella mat ≥ 1000mm x ≥ 40mm + lamella mat ≥ 500mm x ≥ 60mm*			
≤ 323,9		lamella mat ≥ 1250mm x ≥ 60mm + lamella mat ≥ 1000mm x ≥ 60mm*			
≤ 170		lamella mat ≥ 1000mm x ≥ 40mm + only above lamella mat ≥ 500mm x ≥ 30mm*			
Copper, steel, stainless steel, cast iron pipes with NH/ArmaFlex insulation					
≤ 10	≥ 120	NH/ArmaFlex ≥ 500mm x 9 – 19mm + 2x1 layer ArmaProtect FW2 (50mm inside, 75mm outside, wrap width = 125mm) + lamella mat ≥ 250mm x ≥ 20mm*	rigid floor	≥ 150	EI 120-C/U
≤ 15		NH/ArmaFlex ≥ 750mm x 9 – 25mm + 2x1 layer ArmaProtect FW2 (50mm inside, 75mm outside, wrap width = 125mm) + lamella mat ≥ 250mm x ≥ 20mm*			
		NH/ArmaFlex ≥ 750mm x 9 – 19 + ArmaFlex Protect ≥ 250mm x ≥ 13mm*			
≤ 28		NH/ArmaFlex continuous insulation x 10 - 50mm + 2x1 layer ArmaProtect FW2 (50mm inside, 75mm outside, wrap width = 125mm) + lamella mat ≥ 500mm x ≥ 20mm*			EI 90-C/U

* as additional protection

Application in in double board system (2 x ≥60mm) with ablative coating ArmaProtect ABLC (contd.)

Pipe Ø (mm)	Seal thickness (mm)	Measures	Base material	Base material thickness (mm)	Classification
Copper, steel, stainless steel, cast iron pipes with NH/ArmaFlex insulation (contd.)					
≤ 42	≥ 120	NH/ArmaFlex ≥ 750mm x 10 – 50mm + 2x1 layer ArmaProtect FW2 (50mm inside, 75mm outside, wrap width = 125mm) + lamella mat ≥ 250mm x ≥ 20mm*	rigid floor	≥ 150	EI 120-C/U
		NH/ArmaFlex ≥ 750mm x 10 – 50 + 2x1 layer ArmaProtect FW2 (50mm inside, 75mm outside, wrap width = 125mm) + ArmaFlex Protect ≥ 250mm x 2x13mm*			
≤ 54		NH/ArmaFlex ≥ 1000mm x 25mm + 2x1 layer ArmaProtect FW2 (50mm inside, 75mm outside, wrap width = 125mm) + lamella mat ≥ 250mm x ≥ 20mm*			
≤ 88,9		NH/ArmaFlex ≥ 1000mm x 25mm + 2x1 layer ArmaProtect FW2 (50mm inside, 75mm outside, wrap width = 125mm) + lamella mat ≥ 250mm x ≥ 40mm*			EI 90-C/U
		NH/ArmaFlex continuous insulationmm x 89mm + 2x1 layer ArmaProtect FW2 (50mm inside, 75mm outside, wrap width = 125mm) + lamella mat ≥ 250mm x ≥ 40mm*			
≤ 108		NH/ArmaFlex ≥ 1000mm x 57mm + 1x2 layers ArmaProtect FW2 only from below (outside, wrap width = 125mm) + only above lamella mat ≥ 1000mm x ≥ 40mm*			

* as additional protection

Steel, stainless steel, cast iron pipes with NH/ArmaFlex insulation					
≤ 170	≥ 120	NH/ArmaFlex ≥ 1000mm x 50 - 89mm + 2x1 layer ArmaProtect FW2 (50mm inside, 75mm outside, wrap width = 125mm) + lamella mat ≥ 750mm x ≥ 60mm*	rigid floor	≥ 150	EI 90-C/U

* as additional protection

Copper, steel, stainless steel, cast iron pipes with Kaiflex ST insulation					
≤ 8	≥ 120	Kaiflex ST ≥ 2000mm x 9 – 18mm + 2x1 layer ArmaProtect FW2 (50mm inside, 75mm outside, wrap width = 125mm)	rigid floor	≥ 150	EI 120-C/U
≤ 88,9		Kaiflex ST ≥ 2000mm x 9 - 32mm + 2x2 layers ArmaProtect FW2 (50mm inside, 75mm outside, wrap width = 125mm) + lamella mat ≥ 500mm x ≥ 30mm*			

* as additional protection

Steel, stainless steel, cast iron pipes with Kaiflex ST insulation					
≤ 170	≥ 120	Kaiflex ST ≥ 2000mm x 10 – 32mm + 2x2 layers ArmaProtect FW2 (50mm inside, 75mm outside, wrap width = 125mm) + lamella mat ≥ 500mm x ≥ 30mm*	rigid floor	≥ 150	EI 90-C/U (E 120-C/U)

Application in in double board system (2 x ≥60mm) with ablative coating ArmaProtect ABLC (contd.)

Pipe Ø (mm)	Seal thickness (mm)	Measures	Base material	Base material thickness (mm)	Classification
Copper, steel, stainless steel, cast iron pipes with ArmaFlex Protect insulation					
≤ 8	≥ 120	ArmaFlex Protect ≥ 1000mm x 16 –mm	rigid floor	≥ 150	EI 120-C/U
≤ 15		ArmaFlex Protect ≥ 1000mm x 19 –mm			
≤ 22		ArmaFlex Protect ≥ 1000mm x 20 –mm			
≤ 28		ArmaFlex Protect ≥ 1000mm x 25mm			
≤ 35					EI 90-C/U (E 120-C/U)
≤ 54					
≤ 88,9					EI 60-C/U (E 120-C/U)

* as additional protection

Steel, stainless steel, cast iron pipes with ArmaFlex Protect insulation					
≤ 170	≥ 120	ArmaFlex Protect ≥ 1000mm x 2x13mm	rigid floor	≥ 150	EI 90-C/U (E 120-C/U)
Double solar pipes "NanoSUN²"					
DN 25	≥ 120	-	rigid floor	≥ 150	EI 120-C/U
DN 40					EI 120-U/U

* as additional protection

Pipe Ø (mm)	Pipe wall thickness (mm)	Seal thickness (mm)	Measures	Base material	Base material thickness (mm)	Classification
Multi-layer composite pipes HENCO pipes						
≤ 32	≥ 3	≤ 120	lamella mat ≥ 500mm x ≥ 20mm	rigid floor	≥ 100	EI 120-U/C
≤ 63	≥ 4,5		lamella mat ≥ 500mm x ≥ 30mm			
≤ 12	≥ 1,6		ArmaFlex Protect ≥ 240mm x ≥ 13mm			
≤ 63	≥ 4,5		ArmaFlex Protect ≥ 240mm x ≥ 26mm			
Multi-layer composite pipes HENCO pipes with PE-foam insulation						
≤ 14 (PE, 6mm)	-	≤ 120	2x1 layer ArmaProtect FW1 + ≥ 25mm overlapping (60mm inside, 40mm outside, wrap width = 100mm)) + lamella mat ≥ 250mm x ≥ 20mm	rigid floor	≥ 100	EI 120-U/U
≤ 26 (PE, 13mm)						
≤ 32 (PE, 6 -10mm)						

Application in in double board system (2 x ≥60mm) with ablative coating ArmaProtect ABLC (contd.)

Pipe Ø (mm)	Seal thickness (mm)	Measures	Base material	Base material thickness (mm)	Classification
PVC-U and PVC-C pipes in accordance with ISO 1452 and ISO 15493					
≤ 50	≥ 120	2x1 layer ArmaProtect FW1 (60mm inside, 40mm outside, wrap width = 100mm)	rigid floor	≥ 150	EI 120-U/U
≤ 80		2x2 layers ArmaProtect FW1 (60mm inside, 40mm outside, wrap width = 100mm)			
≤ 110		2x3 layers ArmaProtect FW1 (60mm inside, 40mm outside, wrap width = 100mm)			
≤ 160		2x4 layers ArmaProtect FW1 (60mm inside, 40mm outside, wrap width = 100mm)			EI 90-U/C
PE 100 pipes					
≤ 50	≥ 120	2x1 layer ArmaProtect FW1 (60mm inside, 40mm outside, wrap width = 100mm)	rigid floor	≥ 150	EI 120-U/U
≤ 80		2x2 layers ArmaProtect FW1 (60mm inside, 40mm outside, wrap width = 100mm)			
≤ 110		2x3 layers ArmaProtect FW1 (60mm inside, 40mm outside, wrap width = 100mm)			
≤ 160		2x4 layers ArmaProtect FW1 (60mm inside, 40mm outside, wrap width = 100mm)			EI 90-U/C
PP-H pipes					
≤ 50	≥ 120	2x1 layer ArmaProtect FW1 (60mm inside, 40mm outside, wrap width = 100mm)	rigid floor	≥ 150	EI 90-U/U
≤ 80		2x2 layers ArmaProtect FW1 (60mm inside, 40mm outside, wrap width = 100mm)			
≤ 110		2x3 layers ArmaProtect FW1 (60mm inside, 40mm outside, wrap width = 100mm)			
≤ 160		2x4 layers ArmaProtect FW1 (60mm inside, 40mm outside, wrap width = 100mm)			EI 90-U/C

Applications - Quadrupole board system (4 x ⩾ 60mm)

Application of quadrupole board system (4 x ⩾ 60mm) with ablative coating ArmaProtect ABLC in rigid wall and rigid floor

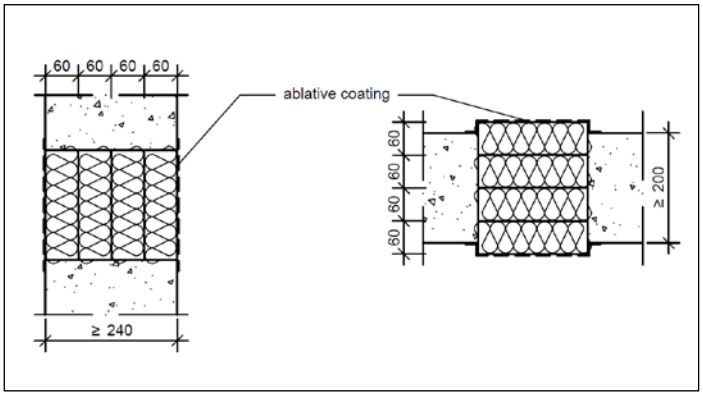

Legend

Dimensions in mm

Application with cables, cable bundles and cable trays with ablative coating ArmaProtect ABLC or intumescent wrap in quadrupole board system (4 x ⩾ 60mm) in rigid wall and rigid floor

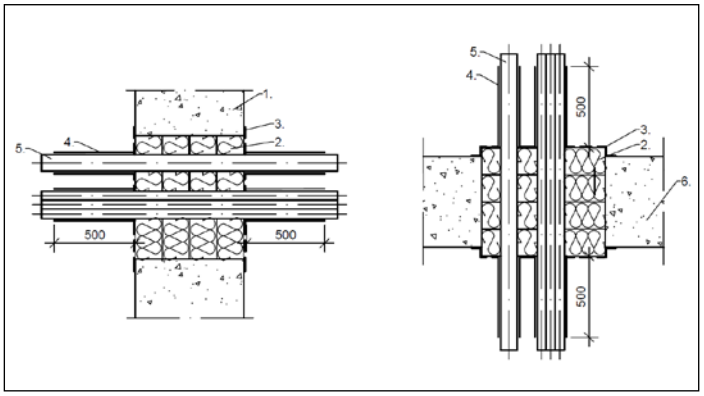

Legend

1. rigid wall ⩾ 240mm
2. mineral wool board
3. ablative coating ArmaProtect ABLC
4. intumescent wrap ArmaProtect FW2
5. cables / cable bundles / cable trays
6. rigid floor ⩾ 200mm

Application with non-combustible pipes with intumescent wrap in quadrupole board system (4 x ⩾ 60mm) in rigid wall and rigid floor

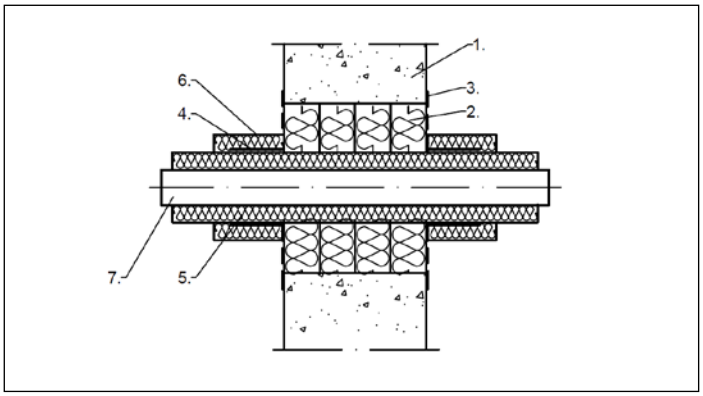

Legend

1. rigid wall ⩾ 240mm
2. mineral wool board
3. ablative coating ArmaProtect ABLC
4. intumescent wrap ArmaProtect FW2
5. ProRox 960 pipe sleeve
6. lamella mat
7. non-combustible pipe

Resistance to Fire - Quadrupole board system (4 x ≥ 60mm)

Wall applications

Application in in quadrupole board system (4 x ≥ 60mm) with ablative coating ArmaProtect ABLC

Type	Seal thickness (mm)	Measures	Base material	Base material thickness (mm)	Classification
Cable and cable bundles					
Cables Ø ≤ 80mm	≥ 240	2x2 layers ArmaProtect FW2, (outside, wrap width = 500mm)	rigid wall	≥ 240	EI 240
Cable bundles Ø ≤ 100mm					

Pipe Ø (MM)	Seal thickness (mm)	Measures	Base material	Base material thickness (mm)	Classification
Steel, stainless steel, cast iron pipes with non-combustible insulation					
≤ 42,4	≥ 240	ProRox 960 ≥ 750mm x ≥ 50mm + 2x1 layer ArmaProtect FW2, (outside, wrap width = 500mm) + lamella mat ≥ 500mm x ≥ 30mm*	rigid wall	≥ 240	EI 240-C/U
≤ 88,9		ProRox 960 ≥ 1000mm x ≥ 60mm + 2x1 layer ArmaProtect FW2, (outside, wrap width = 500mm) + lamella mat ≥ 500mm x ≥ 50mm*			
≤ 168,3		ProRox 960 ≥ 1250mm x ≥ 70mm + 2x1 layer ArmaProtect FW2, (outside, wrap width = 500mm) + lamella mat ≥ 750mm x ≥ 30mm*			
≤ 219,1		ProRox 960 ≥ 1500mm x ≥ 80mm + 2x1 layer ArmaProtect FW2, (outside, wrap width = 1000mm) + lamella mat ≥ 1000mm x ≥ 30mm*			
≤ 323,9		ProRox 960 ≥ 1750mm x ≥ 90mm + 2x1 layer ArmaProtect FW2, (outside, wrap width = 1000mm) + lamella mat ≥ 1250mm x ≥ 30mm*			

* as additional protection

Floor applications

Application in in quadrupole board system (4 x ≥ 60mm) with ablative coating ArmaProtect ABLC

Type	Seal thickness (mm)	Measures	Base material	Base material thickness (mm)	Classification
Cables, cable bundles and cable trays					
Cables Ø ≤ 80mm	≥ 240	2x2 layers ArmaProtect FW2, (outside, wrap width = 500mm)	rigid floor	≥ 200	EI 240
Cable bundles Ø ≤ 100mm					

Applications - One side installation (2 x ≥ 50mm and 3 x ≥ 50mm)

Application of one side installation (2 x ≥ 50mm and 3 x ≥ 50mm) with ablative coating ArmaProtect ABLC in shaft wall

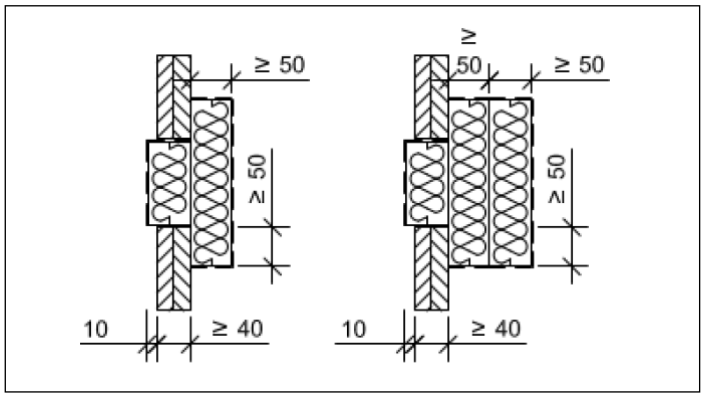

Legend

Dimensions in mm

Application of one side installation (2 x ≥ 50mm and 3 x ≥ 50mm) with ablative coating ArmaProtect ABLC in flexible wall or rigid wall

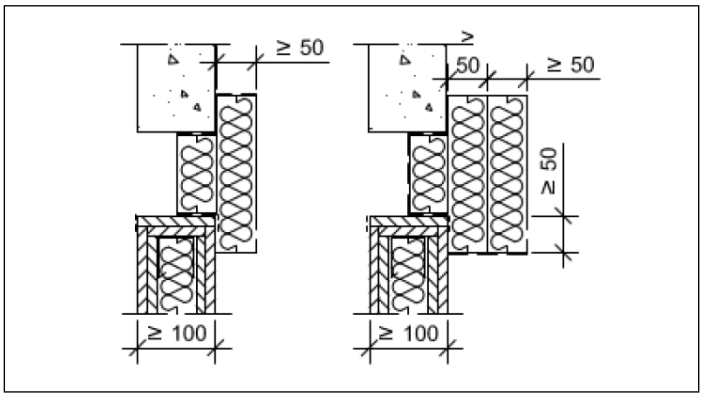

Legend

Dimensions in mm

Application of one side installation (2 x ≥ 50mm and 3 x ≥ 50mm) with ablative coating ArmaProtect ABLC in rigid floor

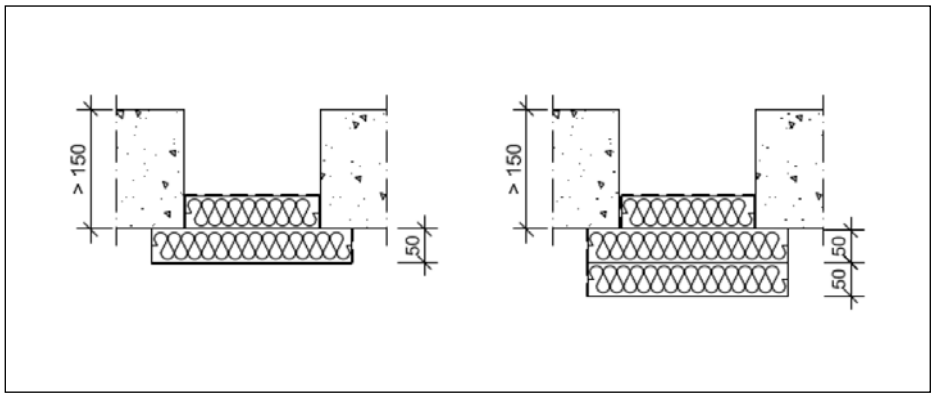

Legend

Dimensions in mm

Application with conduits with intumescent wrap in one side installation (2 x ≥ 50mm) in shaft wall

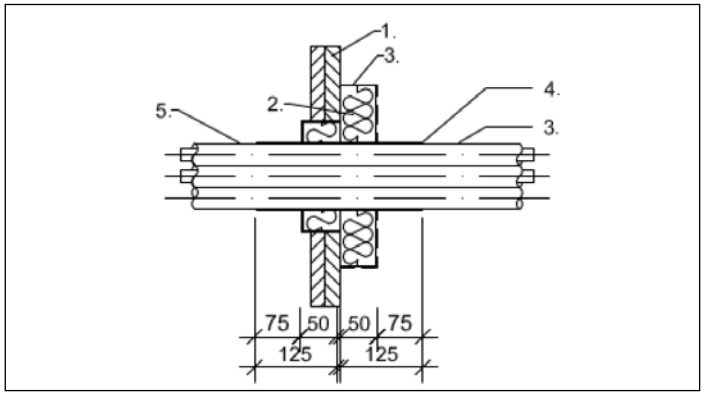

Legend

1. shaft wall ≥ 40mm
2. mineral wool board
3. ablative coating ArmaProtect ABLC
4. intumescent wrap ArmaProtect FW2
5. conduits / conduit bundles

Dimensions in mm

Application with special-duo-coax bundle with intumescent wrap in one side installation (2 x ≥ 50mm) in shaft wall

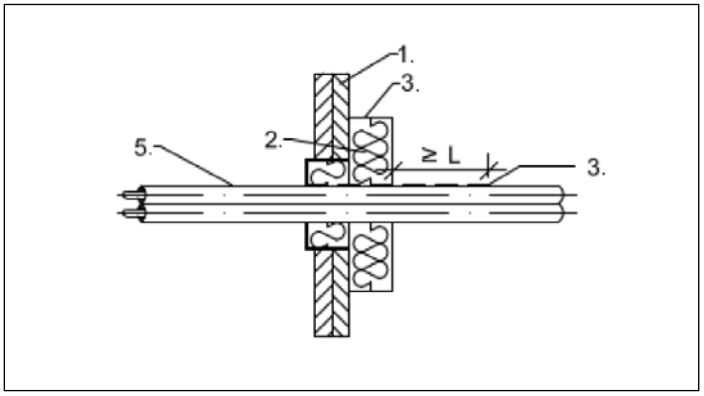

Legend

1. shaft wall ≥ 40mm
2. mineral wool board
3. ablative coating ArmaProtect ABLC
4. intumescent wrap ArmaProtect FW2
5. special-duo-coax bundle

Application with PE lines ("speed pipes" and "speed pipe" bundles with intumescent wrap in one side installation (2 x ≥ 50mm) in shaft wall

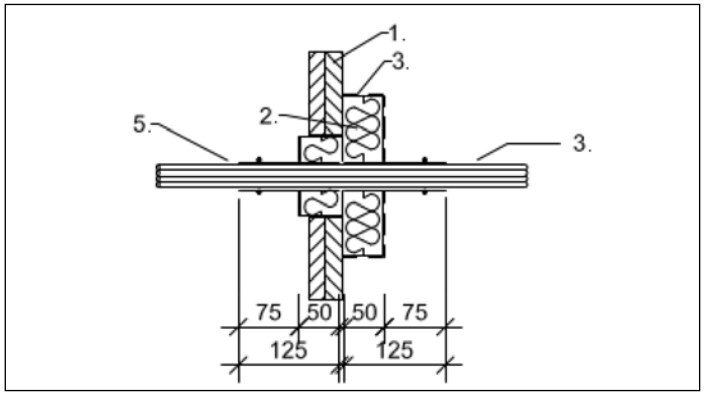

Legend

1. shaft wall ≥ 40mm
2. mineral wool board
3. ablative coating ArmaProtect ABLC
4. intumescent wrap ArmaProtect FW2
5. speed pipes / speed pipe bundles

Dimensions in mm

Application with cable, cable bundles and cable trays with intumescent wrap in one side installation (3 x ≥ 50mm) in shaft wall

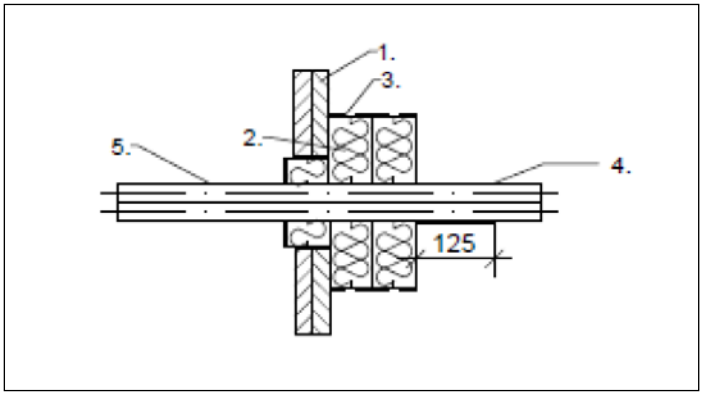

Legend

1. shaft wall ≥ 40mm
2. mineral wool board
3. ablative coating ArmaProtect ABLC
4. intumescent wrap ArmaProtect FW2
5. cables / cable bundles / cable trays

Dimensions in mm

Application with cables, cable bundles and cable trays with intumescent wrap in one side installation (2 x ≥ 50mm) in flexible wall or rigid wall

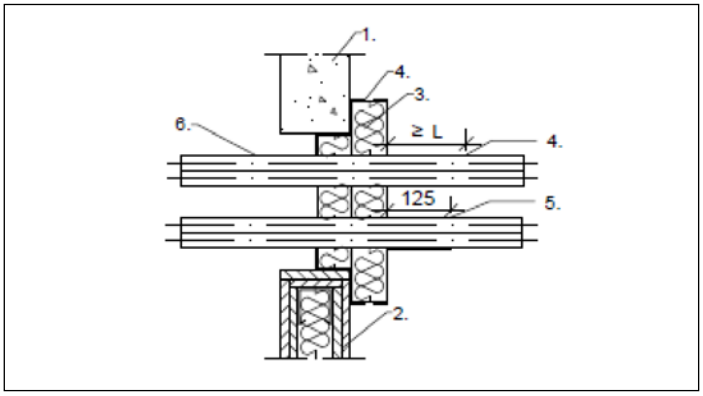

Legend

1. rigid wall ≥ 100mm
2. flexible wall ≥ 100mm
3. mineral wool board
4. ablative coating ArmaProtect ABLC
5. intumescent wrap ArmaProtect FW2
6. cables / cable bundles / cable trays

Dimensions in mm

Application with cables, cable bundles and cable trays with intumescent wrap in one side installation (2 x ≥ 50mm) in rigid floor

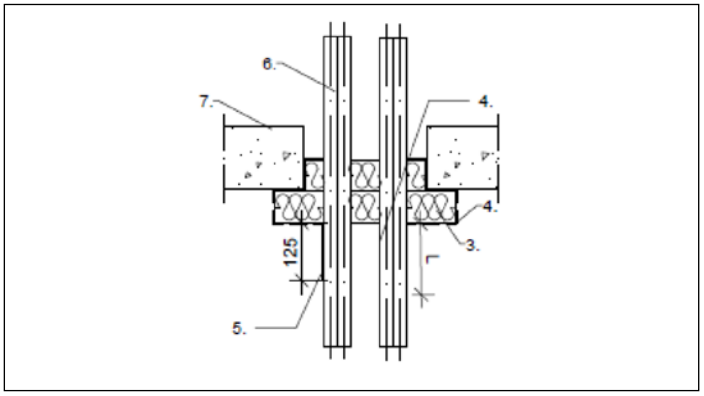

Legend

3. mineral wool board
4. ablative coating ArmaProtect ABLC
5. intumescent wrap ArmaProtect FW2
6. cables / cable bundles / cable trays
7. floor ≥ 150mm

Dimensions in mm

Application with conduits and conduit bundles with intumescent wrap in one side installation (2 x ≥ 50mm) in flexible wall or rigid wall

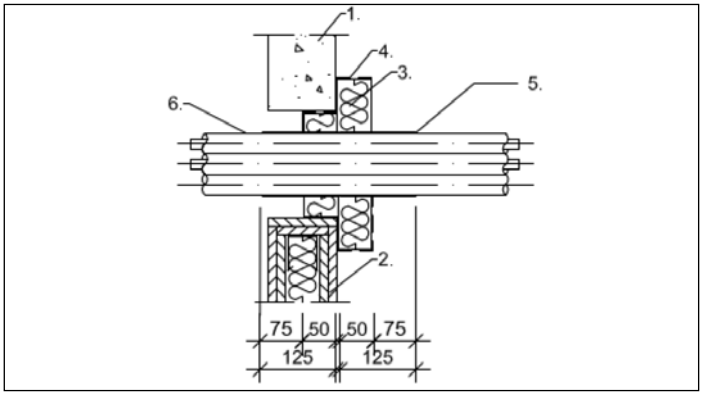

Legend

1. rigid wall ≥ 100mm
2. flexible wall ≥ 100mm
3. mineral wool board
4. ablative coating ArmaProtect ABLC
5. intumescent wrap ArmaProtect FW2
6. conduits / conduit bundles

Dimensions in mm

Application with conduits and conduit bundles with intumescent wrap in one side installation (2 x ≥ 50mm) in rigid floor

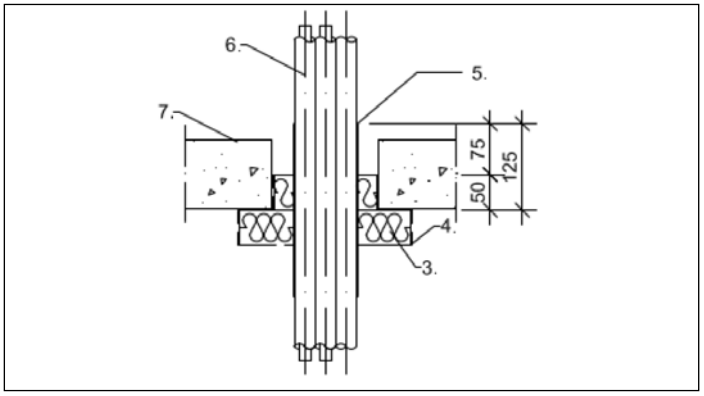

Legend

3. mineral wool board
4. ablative coating ArmaProtect ABLC
5. intumescent wrap ArmaProtect FW2
6. conduits / conduit bundles
7. floor ≥ 150mm

Dimensions in mm

Application with special-duo-coax bundle in one side installation (2 x ≥ 50mm) in flexible wall and rigid wall

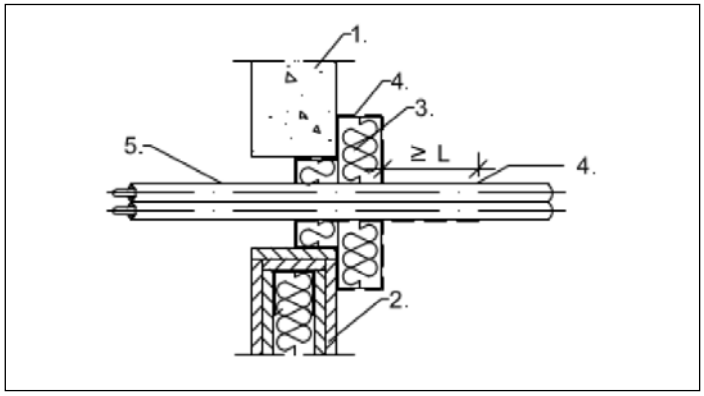

Legend

1. rigid wall ≥ 100mm
2. flexible wall ≥ 100mm
3. mineral wool board
4. ablative coating ArmaProtect ABLC
5. special-duo-coax bundle

Application with special-duo-coax bundle in one side installation (2 x ≥ 50mm) in rigid floor

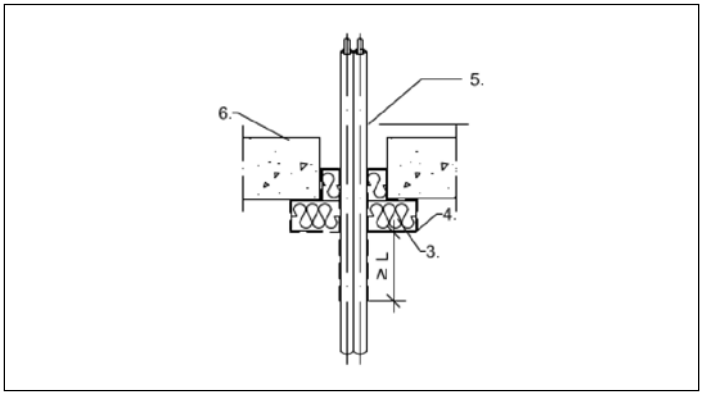

Legend

3. mineral wool board
4. ablative coating ArmaProtect ABLC
5. special-duo-coax bundle
6. floor ≥ 150mm

Application with non-combustible pipe with combustible insulation and intumescent wrap in one side installation (2 x ≥ 50mm) in rigid floor

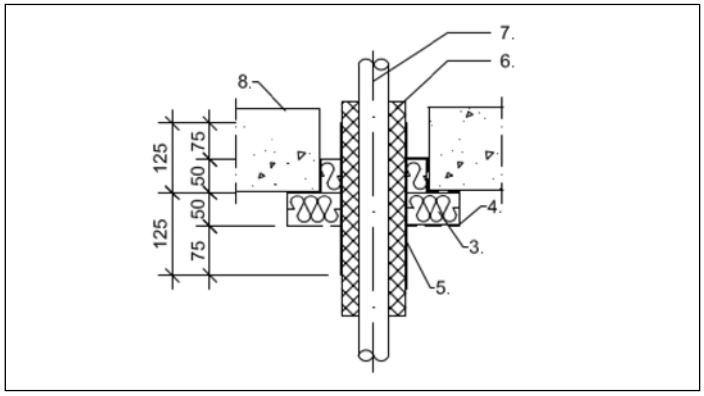

Legend

3. mineral wool board
4. ablative coating ArmaProtect ABLC
5. intumescent wrap ArmaProtect FW2
6. combustible insulation
7. non-combustible pipe
8. floor ≥ 150mm

Dimensions in mm

Application with multi-layer composite pipes with non-combustible insulation in one side installation (2 x ≥ 50mm) in rigid floor

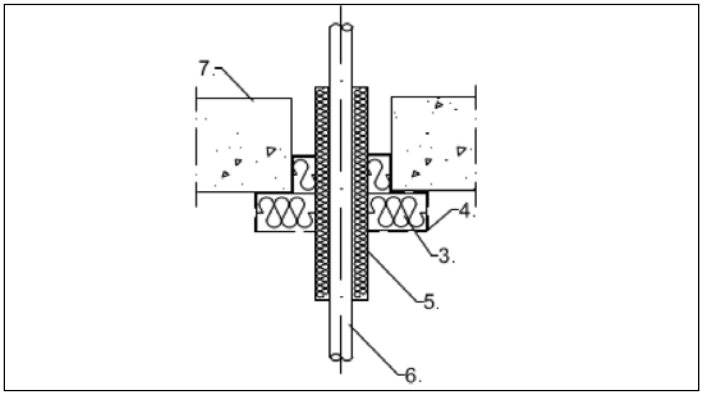

Legend

3. mineral wool board
4. ablative coating ArmaProtect ABLC
5. lamella mat
6. multi-layer composite pipe
7. floor ≥ 150mm

Application with multi-layer composite pipes with intumescent wrap and non-combustible insulation in one side installation (2 x ≥ 50mm) in rigid floor

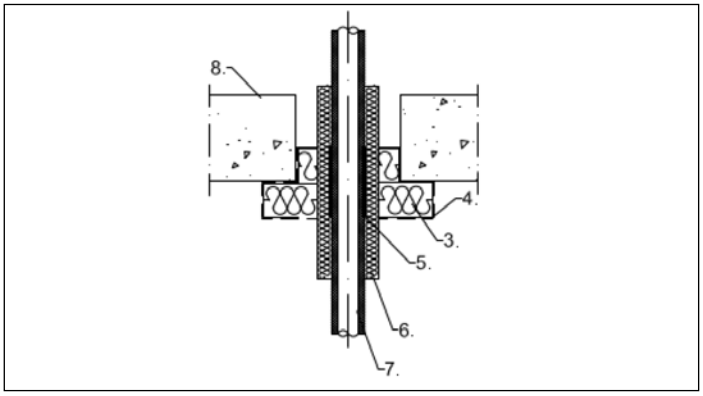

Legend

3. mineral wool board
4. ablative coating ArmaProtect ABLC
5. intumescent wrap ArmaProtect FW2
6. lamella mat
7. multi-layer composite pipe
8. floor ≥ 150mm

Application with combustible pipe with intumescent wrap in one side installation (2 x ≥ 50mm) in rigid floor

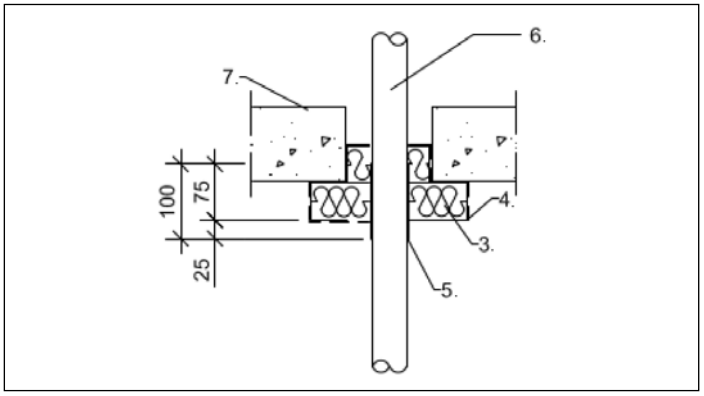

Legend

3. mineral wool board
4. ablative coating ArmaProtect ABLC
5. intumescent wrap ArmaProtect FW2
6. combustible pipe
7. floor ≥ 150mm

Dimensions in mm

Application with cables, cable bundles and cable trays with intumescent wrap in one side installation (3 x ≥ 50mm) in flexible wall or rigid wall

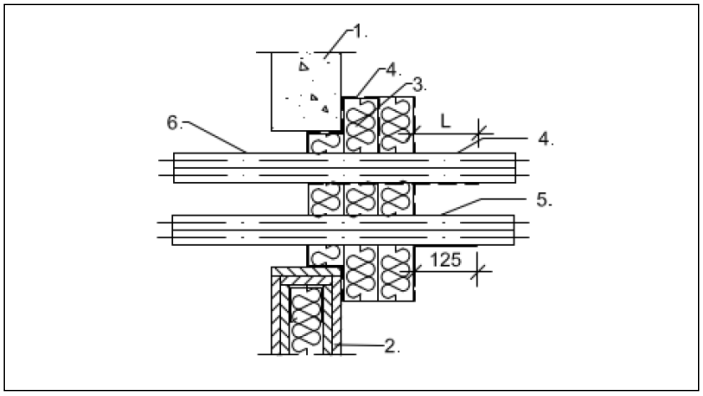

Legend

1. rigid wall ≥ 100mm
2. flexible wall ≥ 100mm
3. mineral wool board
4. ablative coating ArmaProtect ABLC
5. intumescent wrap ArmaProtect FW2
6. cables / cable bundles / cable tray

Dimensions in mm

Application with cables and cable bundles with intumescent wrap in one side installation (3 x ≥ 50mm) in rigid floor

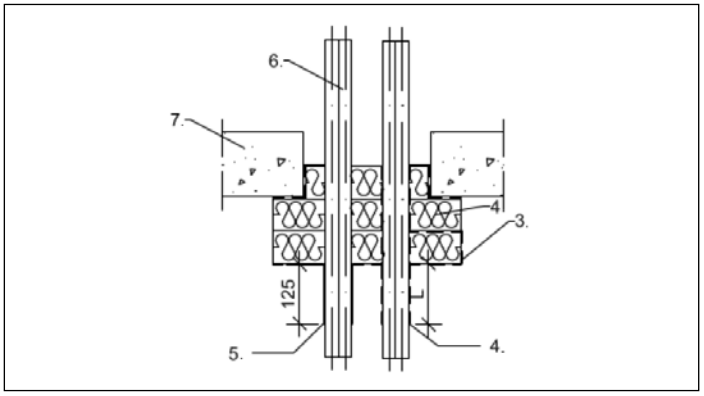

Legend

3. mineral wool board
4. ablative coating ArmaProtect ABLC
5. intumescent wrap ArmaProtect FW2
6. cables / cable bundles
7. rigid floor ≥ 150mm

Dimensions in mm

Application with HVAC split-lines with intumescent wrap in one side installation (3 x ≥ 50mm) in rigid floor

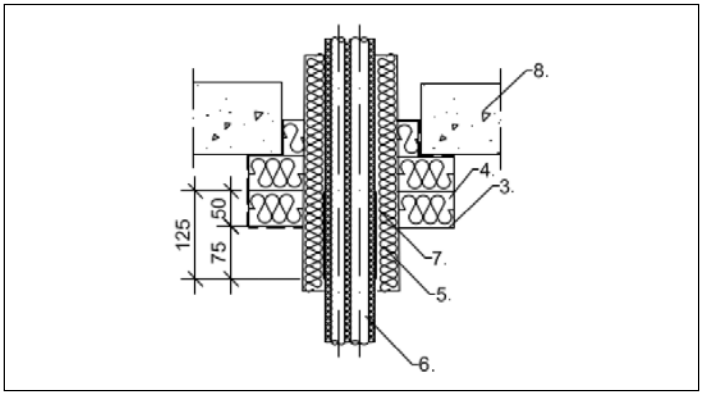

Legend

3. ablative coating ArmaProtect ABLC
4. mineral wool board
5. intumescent wrap ArmaProtect FW2
6. HVAC split-lines
7. rigid floor ≥ 150mm

Dimensions in mm

Application with multi-layer composite pipes with ArmaFlex Protect insulation in one side installation (3 x ≥ 50mm) in flexible wall or rigid wall

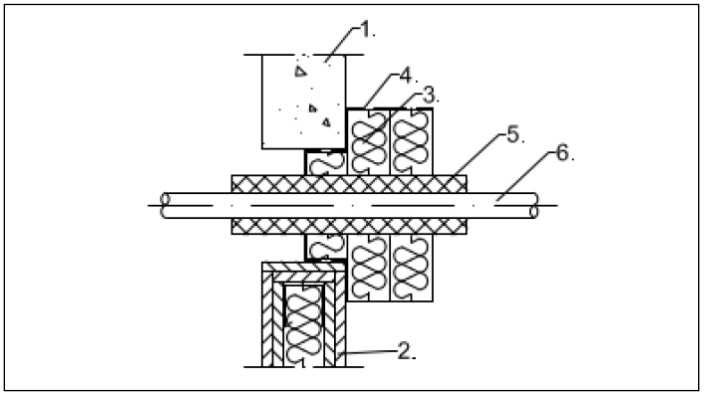

Legend

1. rigid wall ≥ 100mm
2. flexible wall ≥ 100mm
3. mineral wool board
4. ablative coating ArmaProtect ABLC
5. ArmaFlex Protect
6. multi-layer composite pipe

Application with multi-layer composite pipes with ArmaFlex Protect insulation in one side installation (3 x ≥ 50mm) in rigid floor

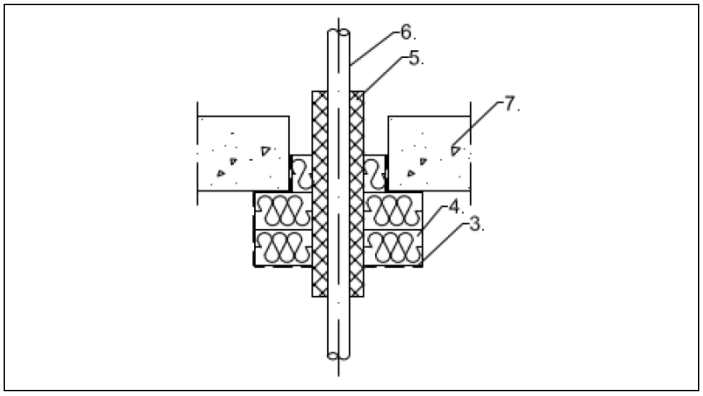

Legend

3. ablative coating ArmaProtect ABLC
4. mineral wool board
5. intumescent wrap ArmaProtect FW2
6. multi-layer composite pipe
7. rigid floor ≥ 150mm

Application with combustible pipes with intumescent wrap in one side installation (3 x ≥ 50mm) in flexible wall or rigid wall

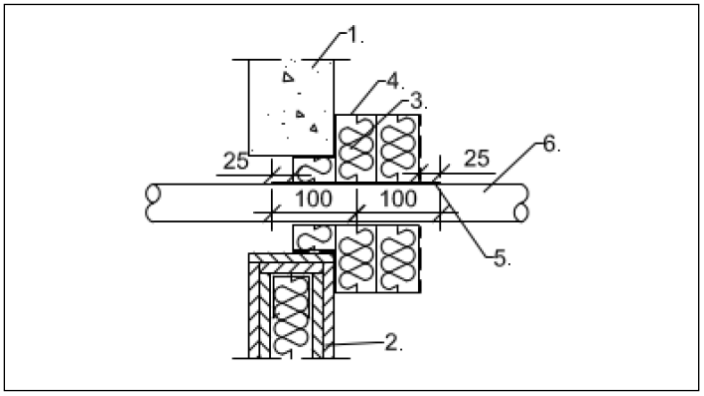

Legend

1. rigid wall ≥ 100mm
2. flexible wall ≥ 100mm
3. mineral wool board
4. ablative coating ArmaProtect ABLC
5. intumescent wrap ArmaProtect FW1
6. combustible pipe

Dimensions in mm

Resistance to Fire - One side installation (2 x ≥ 50mm and 3 x ≥ 50mm)

Wall applications

Application in in one side installation system (2 x ≥ 50mm) with ablative coating ArmaProtect ABLC

Type	Seal thickness (mm)	Measures	Base material	Base material thickness (mm)	Classification
Cable and cable bundles					
Cables Ø ≤ 21mm	≥ 50 (inside) + ≥ 50 (outside)	ArmaProtect ABLC ≥ 150mm x ≥ 1mm dry film thickness	flexible wall & rigid wall	≥ 100	EI 120
		1x1 layer ArmaProtect FW2 + 40 – 60mm overlapping (outside, wrap width = 125mm)			
Cable bundles Ø ≤ 100mm		ArmaProtect ABLC ≥ 150mm x ≥ 1mm dry film thickness			
		1x1 layer ArmaProtect FW2 + 40 – 60mm overlapping (outside, wrap width = 125mm)			EI 90 (E 120)
Conduits and conduit bundles					
Conduits Ø ≤ 21mm	≥ 50 (inside) + ≥ 50 (outside)	2x2 layers ArmaProtect FW2, (50mm inside, 75mm outside, wrap width = 125mm)	flexible wall & rigid wall	≥ 100	EI 120
Conduit bundles Ø ≤ 100mm					
Special-duo-coax-bundle					
Bundles Ø ≤ 90mm with cables Ø ≤ 14mm	≥ 50 (inside) + ≥ 50 (outside)	ArmaProtect ABLC ≥ 150mm x ≥ 1mm dry film thickness	flexible wall & rigid wall	≥ 100	EI 120-U/U
PE lines ("speed pipes" – single "speed pipes" or "speed pipe" bundles, with and without glass fibre cables)					
max. 24 pcs. Ø ≤ 7mm	≥ 50 (inside) + ≥ 50 (outside)	2x2 layers ArmaProtect FW2 (50mm inside, 75mm outside, wrap width = 125mm)	flexible wall & rigid wall	≥ 100	EI 120-U/U
max. 7 pcs. Ø ≤ 10mm					
max. 5 pcs. Ø ≤ 12mm					

Application in in one side installation system (3 x ≥ 50mm) with ablative coating ArmaProtect ABLC

Type	Seal thickness (mm)	Measures	Base material	Base material thickness (mm)	Classification
Cable and cable bundles					
Cables Ø ≤ 21mm	≥ 50 (inside) + ≥ 100 (outside)	ArmaProtect ABLC ≥ 150mm x ≥ 1mm dry film thickness	flexible wall & rigid wall	≥ 100	EI 120
		1x1 layer ArmaProtect FW2 + 45mm overlapping (outside, wrap width = 125mm)			
Cables Ø > 21 - ≤ 50mm		ArmaProtect ABLC ≥ 150mm x ≥ 1mm dry film thickness			EI 90 (E 120)
		1x1 layer ArmaProtect FW2 + 45mm overlapping (outside, wrap width = 125mm)			
Cables Ø > 50 - ≤ 80mm		ArmaProtect ABLC ≥ 150mm x ≥ 1mm dry film thickness			
		1x1 layer ArmaProtect FW2 + 45mm overlapping (outside, wrap width = 125mm)			
Cable bundles Ø ≤ 100mm		ArmaProtect ABLC ≥ 150mm x ≥ 1mm dry film thickness			EI 120
		1x1 layer ArmaProtect FW2 + 45mm overlapping (outside, wrap width = 125mm)			

Pipe Ø (mm)	Pipe wall thickness (mm)	Seal thickness (mm)	Measures	Base material	Base material thickness (mm)	Classification
Multi-layer composite pipes „HENCO pipes with ArmaFlex Protect insulation						
≤ 12	≥ 1,6	≥ 50 (inside) + ≥ 100 (outside)	ArmaFlex Protect ≥ 480mm x ≥ 19mm	flexible wall & rigid wall	≥ 100	EI 120-U/C
≤ 63	≥ 4,5		ArmaFlex Protect ≥ 480mm x ≥ 25mm			

Pipe Ø (mm)	Seal thickness (mm)	Measures	Base material	Base material thickness (mm)	Classification
PVC-U and PVC-C pipes in accordance with ISO 1452 and ISO 15493					
≤ 50	≥ 50 (inside) + ≥ 100 (outside	1x2 layers ArmaProtect FW1 (75mm inside, 25mm outside, wrap width = 100mm)	flexible wall & rigid wall	≥ 100	EI 120-U/U
≤ 80		2x2 layers ArmaProtect FW1 (75mm inside, 25mm outside, wrap width = 100mm)			
≤ 110		2x3 layers ArmaProtect FW1 (75mm inside, 25mm outside, wrap width = 100mm)			

Shaft wall applications

Application in in one side installation system (2 x ≥ 50mm) with ablative coating ArmaProtect ABLC

Type	Seal thickness (mm)	Measures	Base material	Base material thickness (mm)	Classification
Cable and cable bundles					
Cables Ø ≤ 21mm	≥ 50 (inside) + ≥ 50 (outside)	ArmaProtect ABLC ≥ 150mm x ≥ 1mm dry film thickness	shaft wall	≥ 40	EI 90 (E 120)
		1x1 layer ArmaProtect FW2 + 40 – 60mm overlapping (outside, wrap width = 125mm)			EI 120
Cable bundles Ø ≤ 100mm		ArmaProtect ABLC ≥ 150mm x ≥ 1mm dry film thickness			
		1x1 layer ArmaProtect FW2 + 40 – 60mm overlapping (outside, wrap width = 125mm)			EI 90 (E 120)
Conduits and conduit bundles					
Conduits Ø ≤ 21mm	≥ 50 (inside) + ≥ 50 (outside)	2x2 layers ArmaProtect FW2, (50mm inside, 75mm outside, wrap width = 125mm)	shaft wall	≥ 40	EI 90 (E 120)
Conduit bundles Ø ≤ 100mm					EI 120
Special-duo-coax-bundle					
Bundles Ø ≤ 21mm with cables Ø ≤ 14mm	≥ 50 (inside) + ≥ 50 (outside)	ArmaProtect ABLC ≥ 150mm x ≥ 1mm dry film thickness	shaft wall	≥ 40	EI 120-U/U
PE lines ("speed pipes" – single "speed pipes" or "speed pipe" bundles, with and without glass fibre cables)					
max. 24 pcs. Ø ≤ 7mm	≥ 50 (inside) + ≥ 50 (outside)	2x2 layers ArmaProtect FW2 (50mm inside, 75mm outside, wrap width = 125mm)	shaft wall	≥ 40	EI 120-U/U
max. 7 pcs. Ø ≤ 10mm					
max. 5 pcs. Ø ≤ 12mm					

Application in in one side installation system (3 x ≥ 50mm) with ablative coating ArmaProtect ABLC

Type	Seal thickness (mm)	Measures	Base material	Base material thickness (mm)	Classification
Cables, cable bundles and cable trays					
Cables Ø ≤ 21mm	≥ 50 (inside) + ≥ 100 (outside)	1x1 layer ArmaProtect FW2 + 40 – 60mm overlapping (outside, wrap width = 125mm)	shaft wall	≥ 40	EI 120
Cables Ø > 21 - ≤ 50mm					EI 90 (E 120)
Cables Ø > 50 ≤ 80mm					
Cable bundles Ø ≤ 100mm					EI 120

Floor applications

Application in in one side installation system (2 x ≥ 50mm) with ablative coating ArmaProtect ABLC

Type	Seal thickness (mm)	Measures	Base material	Base material thickness (mm)	Classification
Cable and cable bundles					
Cables Ø ≤ 21mm	≥ 50 (inside) + ≥ 50 (outside)	ArmaProtect ABLC ≥ 150mm x ≥ 1mm dry film thickness	rigid floor	≥ 150	EI 120
		1x1 layer ArmaProtect FW2 + 40 – 60mm overlapping (outside, wrap width = 125mm)			
Cables Ø > 21 - ≤ 50mm		ArmaProtect ABLC ≥ 150mm x ≥ 1mm dry film thickness			
Cables Ø > 50 ≤ 80mm					
Cable bundles Ø ≤ 100mm		1x1 layer ArmaProtect FW2 + 40 – 60mm overlapping (outside, wrap width = 125mm)			
Conduits and conduit bundles					
Conduits Ø ≤ 21mm	≥ 50 (inside) + ≥ 50 (outside)	2x2 layers ArmaProtect FW2, (50mm inside, 75mm outside, wrap width = 125mm)	rigid floor	≥ 150	EI 120-U/U
Conduit bundles Ø ≤ 100mm					
Special-duo-coax-bundle					
Bundles Ø ≤ 90mm with cables Ø ≤ 14mm	≥ 50 (inside) + ≥ 50 (outside)	ArmaProtect ABLC ≥ 150mm x ≥ 1mm dry film thickness	rigid floor	≥ 150	EI 120-U/U
PE lines ("speed pipes" – single "speed pipes" or "speed pipe" bundles, with and without glass fibre cables)					
max. 24 pcs. Ø ≤ 7mm	≥ 50 (inside) + ≥ 50 (outside)	2x2 layers ArmaProtect FW2 (50mm inside, 75mm outside, wrap width = 125mm)	rigid floor	≥ 150	EI 120-U/U
max. 7 pcs. Ø ≤ 10mm					
max. 5 pcs. Ø ≤ 12mm					

Pipe Ø (mm)	Seal thickness (mm)	Measures	Base material	Base material thickness (mm)	Classification
Copper, steel, stainless steel, cast iron pipes with non-combustible insulation					
≤ 28	≥ 50 (inside) + ≥ 50 (outside	lamella mat ≥ 500mm x ≥ 30mm (top/bottom)	rigid floor	≥ 150	EI 120-C/U
≤ 42		lamella mat ≥ 500mm x ≥ 40mm (top/bottom)			
≤ 54		lamella mat continuous / ≥ 950mm x ≥ 40mm (top/bottom)			
		lamella mat ≥ 500mm / 1000mm x ≥ 30mm (top/bottom) + lamella mat ≥ 950mm x ≥ 30mm* + lamella mat ≥ 500mm x ≥ 30mm*			
≤ 88,9		lamella mat continuous / ≥ 950mm x ≥ 50mm (top/bottom)			
		lamella mat ≥ 500mm / 1000mm x ≥ 50mm (top/bottom) + lamella mat ≥ 500mm x ≥ 50mm			

* as additional protection

Application in in one side installation system (2 x ≥ 50mm) with ablative coating ArmaProtect ABLC (contd.)

Pipe Ø (mm)	Seal thickness (mm)	Measures	Base material	Base material thickness (mm)	Classification
Steel, stainless steel, cast iron pipes with non-combustible insulation					
≤ 63,5	≥ 50 (inside) + ≥ 50 (outside	lamella mat continuous / ≥ 950mm x ≥ 30mm (top/bottom)	rigid floor	≥ 150	EI 120-C/U
		lamella mat ≥ 500mm / 1000mm x ≥ 30mm (top/bottom) + lamella mat ≥ 500mm x ≥ 30mm*			
≤ 114,3		lamella mat continuous / ≥ 950mm x ≥ 50mm (top/bottom)			
		lamella mat ≥ 500mm / 1000mm x ≥ 30mm (top/bottom) + lamella mat ≥ 950mm x ≥ 30mm*			

* as additional protection

Copper, steel, stainless steel, cast iron pipes with NH/ArmaFlex insulation					
≤ 15	≥ 50 (inside) + ≥ 50 (outside	NH/ArmaFlex ≥ 400mm (bottom) / ≥ 750mm x 25mm + 2x1 layer ArmaProtect FW2 (50mm inside, 75mm outside, wrap width = 125mm)	rigid floor	≥ 150	EI 90-C/U (E 120-C/U)
		NH/ArmaFlex ≥ 400mm (bottom) / ≥ 750mm x 13 -24mm + 2x1 layer ArmaProtect FW2 (50mm inside, 75mm outside, wrap width = 125mm)			EI 120-C/U
≤ 28		NH/ArmaFlex ≥ 400mm (bottom) / ≥ 750mm x 19 -25mm + 2x1 layer ArmaProtect FW2 (50mm inside, 75mm outside, wrap width = 125mm)			
≤ 42		NH/ArmaFlex ≥ 400mm (bottom) / ≥ 750mm x 19 -24mm + 2x1 layer ArmaProtect FW2 (50mm inside, 75mm outside, wrap width = 125mm)			EI 90-C/U (E 120-C/U)
		NH/ArmaFlex ≥ 400mm (bottom) / ≥ 750mm x 25mm + 2x1 layer ArmaProtect FW2 (50mm inside, 75mm outside, wrap width = 125mm)			EI 120-C/U

* as additional protection

Pipe Ø (mm)	Pipe wall thickness (mm)	Seal thickness (mm)	Measures	Base material	Base material thickness (mm)	Classification
Multi-layer composite pipes HENCO pipes						
≤ 12	≥ 1,6	≥ 50 (inside) + ≥ 50 (outside)	lamella mat ≥ 500mm x ≥ 20mm	rigid floor	≥ 150	EI 120-U/C
≤ 63	≥ 4,5		lamella mat ≥ 500mm x ≥ 30mm			
Multi-layer composite pipes „HENCO pipes with PE-foam insulation						
≤ 32	≥ 3	≥ 50 (inside) + ≥ 50 (outside)	2x1 layer ArmaProtect FW1 (centric, wrap width = 100mm) + lamella mat ≥ 500mm x ≥ 20mm*	rigid floor	≥ 150	EI 120-U/C

* as additional protection

Application in in one side installation system (2 x ≥ 50mm) with ablative coating ArmaProtect ABLC (contd.)

Pipe Ø (mm)	Seal thickness (mm)	Measures	Base material	Base material thickness (mm)	Classification
PVC-U and PVC-C pipes in accordance with ISO 1452 and ISO 15493					
≤ 50	≥ 50 (inside) + ≥ 50 (outside	1x2 layers ArmaProtect FW1 (75mm inside, 25mm outside, wrap width = 100mm)	rigid floor	≥ 150	EI 90-U/C
≤ 70					EI 120-U/C
≤ 110		1x3 layers ArmaProtect FW1 (75mm inside, 25mm outside, wrap width = 100mm)			
		1x4 layers ArmaProtect FW1 (75mm inside, 25mm outside, wrap width = 100mm)			

Application in in one side installation system (3 x ≥ 50mm) with ablative coating ArmaProtect ABLC

Type	Seal thickness (mm)	Measures	Base material	Base material thickness (mm)	Classification
Cables, cable bundles and cable trays					
Cables Ø ≤ 21mm	≥ 50 (inside) + ≥ 100 (outside)	ArmaProtect ABLC ≥ 150mm x ≥ 1mm dry film thickness	rigid floor	≥ 150	EI 120
		1x1 layer ArmaProtect FW2 + 45mm overlapping (outside, wrap width = 125mm)			
Cables Ø > 21 - ≤ 50mm		ArmaProtect ABLC ≥ 150mm x ≥ 1mm dry film thickness			EI 90
		1x1 layer ArmaProtect FW2 + 45mm overlapping (outside, wrap width = 125mm)			
Cables Ø > 50 ≤ 80mm		ArmaProtect ABLC ≥ 150mm x ≥ 1mm dry film thickness			
		1x1 layer ArmaProtect FW2 + 45mm overlapping (outside, wrap width = 125mm)			
Cable bundles Ø ≤ 100mm		ArmaProtect ABLC ≥ 150mm x ≥ 1mm dry film thickness			EI 120
		1x1 layer ArmaProtect FW2 + 45mm overlapping (outside, wrap width = 125mm)			
HVAC split line combinations					
Double pipe (Ø = 6-22mm / 8-22mm) or single copper pipe (Ø = 6-22mm) with PEF insulation + PVC-U pipe (Ø ≤ 25) + 4 cables (Ø ≤ 21mm)	≥ 50 (inside) + ≥ 100 (outside)	2x1 layer ArmaProtect FW2 (50mm inside, 75mm outside, wrap width = 125mm) + lamella mat ≥ 250 / 500mm (top/bottom) x ≥ 30mm	rigid floor	≥ 150	EI 90-U/U

Application in in one side installation system (3 x ≥ 50mm) with ablative coating ArmaProtect ABLC (contd.)

Pipe Ø (mm)	Pipe wall thickness (mm)	Seal thickness (mm)	Measures	Base material	Base material thickness (mm)	Classification
Multi-layer composite pipes HENCO pipes						
≤ 12	≥ 1,6	≥ 50 (inside) + ≥ 100 (outside)	ArmaFlex Protect ≥ 480mm x ≥ 19mm	rigid floor	≥ 150	EI 90-U/C
≤ 63	≥ 4,5		ArmaFlex Protect ≥ 480mm x ≥ 25mm			

Pipe Ø (mm)	Seal thickness (mm)	Measures	Base material	Base material thickness (mm)	Classification
PVC-U and PVC-C pipes in accordance with ISO 1452 and ISO 15493					
≤ 50	≥ 50 (inside) + ≥ 100 (outside	2x1 layer ArmaProtect FW1 (75mm inside, 25mm outside, wrap width = 100mm)	rigid floor	≥ 150	EI 90-U/U
≤ 80		2x2 layers ArmaProtect FW1 (75mm inside, 25mm outside, wrap width = 100mm)			EI 120-U/U

Applications - Penetration seals of mineral wool with ablative filler ArmaProtect ABLF

Application with cables and cable bundles in penetration seals of mineral wool with ablative filler ArmaProtect ABLF in flexible wall, rigid wall and rigid floor

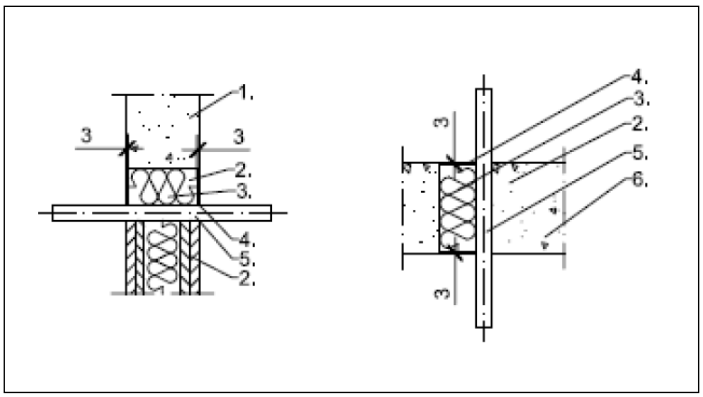

Legend

1. rigid wall ≥ 100mm
2. flexible wall ≥ 100mm

3+4. loose mineral wool with ablative filler ArmaProtect ABLF

5. cables / cable bundles

Legend

2. rigid floor ≥ 150mm

3+4. loose mineral wool with ablative filler ArmaProtect ABLF

5. cables / cable bundles
6. rigid floor ≥ 150mm

Application with conduits and conduit bundles in penetration seals of mineral wool with ablative filler ArmaProtect ABLF in flexible wall, rigid wall and rigid floor

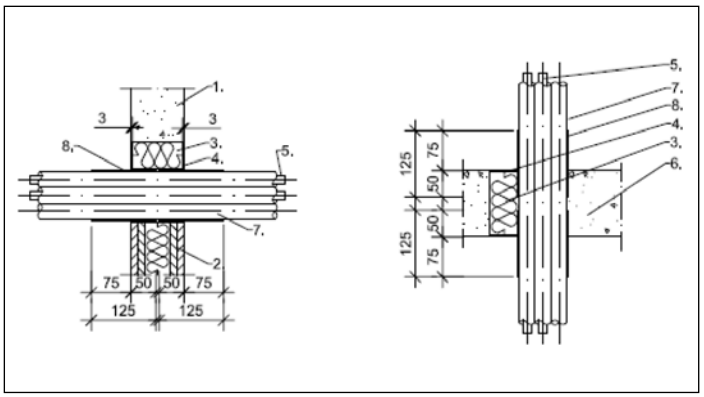

Legend

1. rigid wall ≥ 100mm
2. flexible wall ≥ 100mm

3+4. loose mineral wool with ablative filler ArmaProtect ABLF ABLF ≥ 3mm

5. cables
7. conduits / conduit bundles
8. intumescent wrap ArmaProtect FW2

Dimensions in mm

Legend

3+4. loose mineral wool with ablative filler ArmaProtect ABLF ABLF ≥ 3mm

5. cables
6. rigid floor ≥ 150mm
7. conduits / conduit bundles
8. intumescent wrap ArmaProtect FW2

Dimensions in mm

Application with metal conduits in penetration seals of mineral wool with ablative filler ArmaProtect ABLF in flexible wall and rigid wall

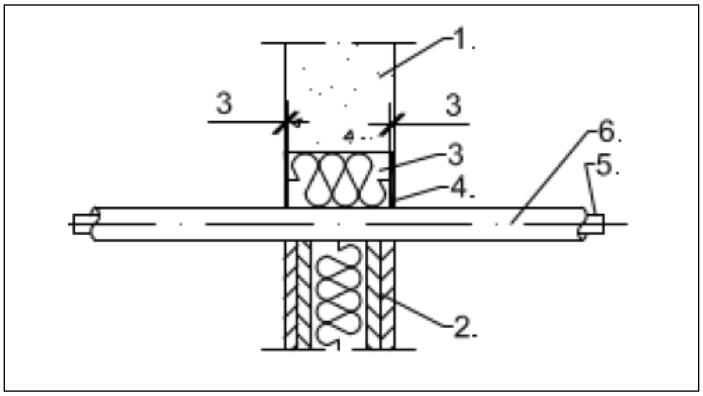

Legend

1. rigid wall ≥ 100mm
2. flexible wall ≥ 100mm

3+4. loose mineral wool with ablative filler ArmaProtect ABLF

5. cable
6. metal conduit
7. intumescent wrap ArmaProtect FW2
8 lamella mat

Dimensions in mm

Application with metal conduits in penetration seals of mineral wool with ablative filler ArmaProtect ABLF with intumescent wrap in flexible wall and rigid wall

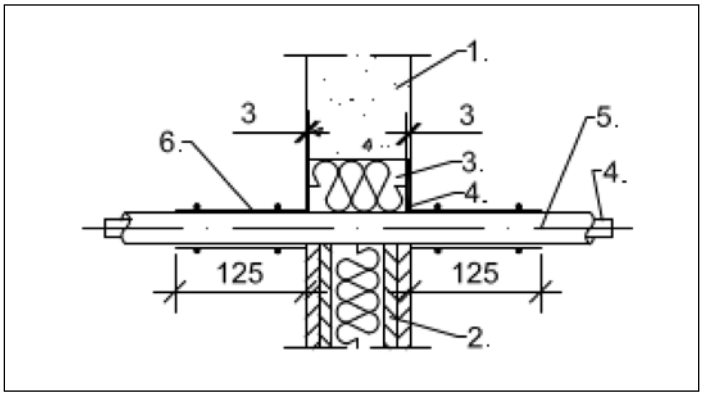

Legend

1. rigid wall ≥ 100mm
2. flexible wall ≥ 100mm

3+4. loose mineral wool with ablative filler ArmaProtect ABLF

5. cable
6. metal conduit
7. intumescent wrap ArmaProtect FW2
8 lamella mat

Dimensions in mm

Application with metal conduits in penetration seals of mineral wool with ablative filler ArmaProtect ABLF with lamella mat in flexible wall and rigid wall

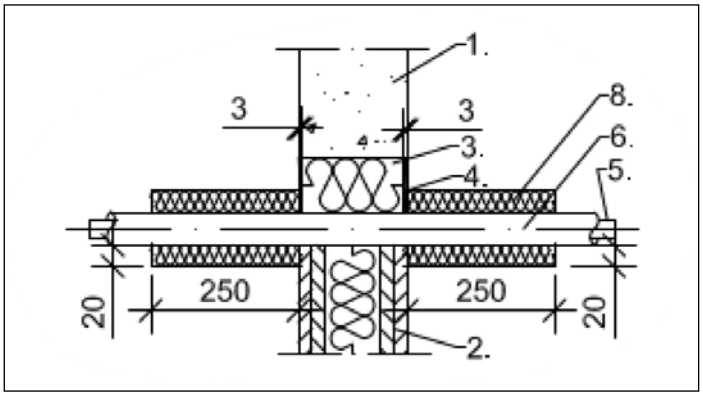

Legend

1. rigid wall ≥ 100mm
2. flexible wall ≥ 100mm

3+4. loose mineral wool with ablative filler ArmaProtect ABLF

5. cable
6. metal conduit
7. intumescent wrap ArmaProtect FW2
8 lamella mat

Dimensions in mm

Application with HVAC split line combinations in penetration seals of mineral wool with ablative filler ArmaProtect ABLF in flexible wall, rigid wall and rigid floor

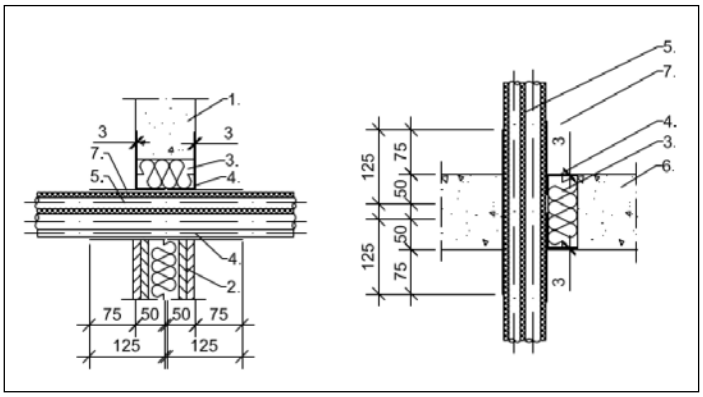

Legend

1. rigid wall ≥ 100mm
2. flexible wall ≥ 100mm

3+4. loose mineral wool with ablative filler ArmaProtect ABLF

5. HVAC split line combination
6. rigid floor ≥ 150mm
7. intumescent wrap ArmaProtect FW2

Dimensions in mm

Application with non-combustible pipes with non-combustible insulation in penetration seals of mineral wool with ablative filler ArmaProtect ABLF in flexible wall, rigid wall and rigid floor

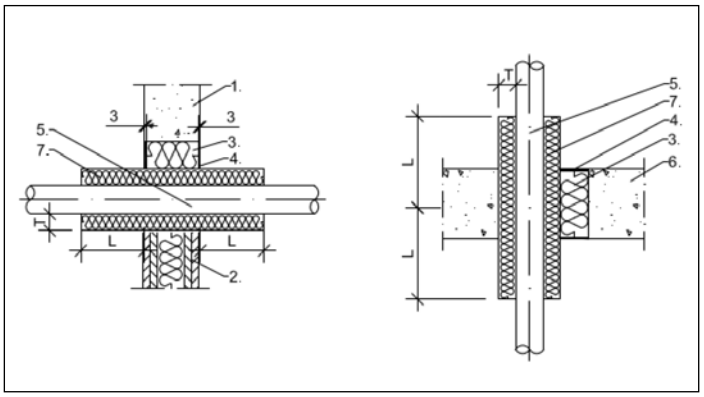

Legend

1. rigid wall ≥ 100mm
2. flexible wall ≥ 100mm

3+4. loose mineral wool with ablative filler ArmaProtect ABLF

5. non-combustible pipe
6. rigid floor ≥ 150mm
7. lamella mat

Dimensions in mm

Application with double solar pipes "NanoSUN²" in penetration seals of mineral wool with ablative filler ArmaProtect ABLF in rigid floor

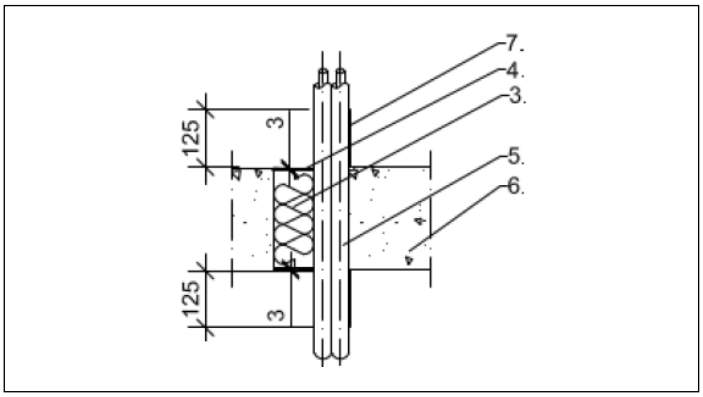

Legend

3+4. loose mineral wool with ablative filler ArmaProtect ABLF

5. solar pipes
6. rigid floor ≥ 150mm
7. intumescent wrap ArmaProtect FW2

Dimensions in mm

Application with combustible pipes in penetration seals of mineral wool with ablative filler ArmaProtect ABLF with intumescent wrap in rigid floor

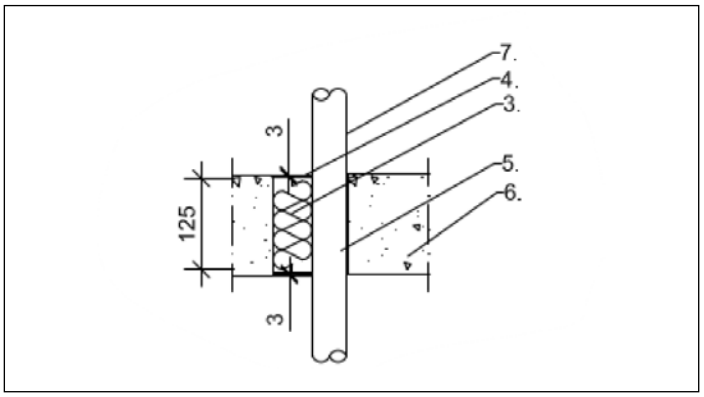

Legend

3+4. loose mineral wool with ablative filler ArmaProtect ABLF

5. combustible pipe
6. rigid floor ≥ 150mm
7. intumescent wrap ArmaProtect FW2

Dimensions in mm

Application with cables and cable bundles in penetration seals with ablative filler ArmaProtect ABLF (without mineral wool) in flexible wall, rigid wall and rigid floor

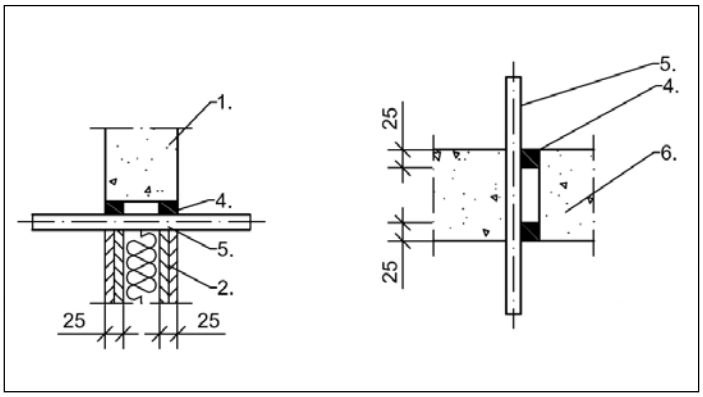

Legend

1. rigid wall ≥ 100mm
2. flexible wall ≥ 100mm
4. ablative filler ArmaProtect ABLF ≥ 3mm
5. cables / cable bundles
6. rigid floor ≥ 150mm

Dimensions in mm

Resistance to Fire - Penetration seals of mineral wool with ablative filler ArmaProtect ABLF

Wall applications

Application in penetration seals of mineral wool with ablative filler ArmaProtect ABLF

Type	Seal thickness (mm)	Measures	Base material	Base material thickness (mm)	Classification
Cables and cable bundles					
Cables Ø ≤ 21mm	≥ 100	-	flexible wall & rigid wall	≥ 100	EI 90
Cable bundles with cables Ø ≤ 21mm					
Cables, cable bundles and cable trays					
Plastic conduits Ø ≤ 32mm (flexible, single or bundled Ø ≤ 100mm, with/without cables Ø ≤ 21mm)	≥ 100	2x2 layers ArmaProtect FW2 (50mm inside, 75mm outside, wrap width = 125mm)	flexible wall & rigid wall	≥ 100	EI 120-U/U
Plastic conduits Ø ≤ 16 -50mm (rigid, single or bundled Ø ≤ 70mm, with/without cables Ø ≤ 21mm)		2x1 layer (single) 2x1 layer (bundle) ArmaProtect FW2 (50mm inside, 75mm outside, wrap width = 125mm)			
Metal conduits Ø ≤ 16mm (with/without cable Ø ≤ 14mm)		-			EI 120-C/U
Metal conduits Ø > 16 - ≤ 32mm (with/without cable Ø ≤ 14mm)					EI 30-C/U (E 120-C/U)
Metal conduits Ø > 32 - ≤ 50mm (with/without cable Ø ≤ 21mm)					
Metal conduits Ø ≤ 16mm (with/without cable Ø ≤ 14mm)		2x2 layers ArmaProtect FW2 (outside, wrap width = 125mm)			EI 120-C/U
Metal conduits Ø > 16 - ≤ 32mm (with/without cable Ø ≤ 14mm)					
Metal conduits Ø > 32 - ≤ 50mm (with/without cable Ø ≤ 21mm)					
Metal conduits Ø ≤ 32mm (with/without cable Ø ≤ 14mm)		lamella mat ≥ 250mm x ≥ 30mm			
Metal conduits Ø > 32 - ≤ 50mm (with/without cable Ø ≤ 21mm)					
HVAC split line combinations					
Double pipe (Ø = 6 - 10mm / 10 - 18mm) or single copper pipe (Ø = 6 - 18mm) + PVC-U pipe (Ø ≤ 25) + 2 cables (Ø ≤ 21mm)	≥ 100	2x1 layer ArmaProtect FW2 (50mm inside, 75mm outside, wrap width = 125mm)	flexible wall & rigid wall	≥ 100	EI 90-U/U

Application in penetration seals of mineral wool with ablative filler ArmaProtect ABLF (contd.)

Pipe Ø (mm)	Pipe wall thickness (mm)	Seal thickness (mm)	Measures	Base material	Base material thickness (mm)	Classification
Copper, steel, stainless steel, cast iron pipes with non-combustible insulation						
≤ 15	≥ 0,8	≥ 100	lamella mat ≥ 250mm x ≥ 20mm	flexible wall & rigid wall	≥ 100	EI 60-C/U (E 90-C/U)
≤ 22	≥ 1		lamella mat ≥ 250mm x ≥ 60mm			
			lamella mat ≥ 500mm x ≥ 20mm			
≤ 54	≥ 1,5		lamella mat ≥ 500mm x ≥ 30mm			
≤ 88,9	≥ 2		lamella mat ≥ 800mm x ≥ 40mm			
Steel, stainless steel, cast iron pipes with non-combustible insulation						
≤ 88,9	≥ 2	≥ 100	lamella mat ≥ 800mm x ≥ 40mm	flexible wall & rigid wall	≥ 100	EI 90-C/U
≤ 114,3	≥ 3,6		lamella mat ≥ 500mm x ≥ 40mm			EI 60-C/U (E 90-C/U)
≤ 170	≥ 3		lamella mat ≥ 800mm x ≥ 60mm + lamella mat ≥ 500mm x ≥ 30mm*			EI 60-C/U
≤ 219,1	≥ 5					EI 60-C/U (E 90-C/U)

* as additional protection

Application in penetration seals with ablative filler ArmaProtect ABLF (without mineral wool)

Type	Seal thickness (mm)	Measures	Base material	Base material thickness (mm)	Classification
Cables and cable bundles					
Cables Ø ≤ 21mm	≥ 100	-	flexible wall & rigid wall	≥ 100	EI 90

Floor applications

Application in penetration seals of mineral wool with ablative filler ArmaProtect ABLF

Type	Seal thickness (mm)	Measures	Base material	Base material thickness (mm)	Classification
Cables and cable bundles					
Cables Ø ≤ 21mm	≥ 150	-	rigid floor	≥ 150	EI 90
Cable bundles with cables Ø ≤ 21mm					
Conduits and conduit bundles					
Plastic conduits Ø ≤ 32mm (flexible, single or bundled Ø ≤ 100mm, with/without cables Ø ≤ 21mm)	≥ 150	2x2 layers ArmaProtect FW2 (50mm inside, 75mm outside, wrap width = 125mm)	rigid floor	≥ 150	EI 90
HVAC split line combinations					
Double pipe (Ø = 6-10mm) or single copper pipe (Ø = 6-10mm) with pipe wall thickness 1mm and PE pipe insulation of 9mm thickness made of PEF	≥ 150	2x2 layers ArmaProtect FW2 (50mm inside, 75mm outside, wrap width = 125mm)	rigid floor	≥ 150	EI 90-U/U
Double pipe (Ø = 10/18mm) or single copper pipe (Ø = 10-18mm= with pipe wall thickness 1mm and PE pipe insulation of 9mm thickness made of PEF					EI 30-U/U (E 90-U/U)

Pipe Ø (mm)	Pipe wall thickness (mm)	Seal thickness (mm)	Measures	Base material	Base material thickness (mm)	Classification
Copper, steel, stainless steel, cast iron pipes with non-combustible insulation						
≤ 15	≥ 0,8	≥ 150	lamella mat ≥ 250mm x ≥ 20mm	rigid floor	≥ 150	EI 60-C/U
≤ 22	≥ 1		lamella mat ≥ 250mm x ≥ 60mm			
			lamella mat ≥ 500mm x ≥ 20mm			
≤ 54	≥ 1,5		lamella mat ≥ 500mm x ≥ 30mm			
≤ 88,9	≥ 2		lamella mat ≥ 800mm x ≥ 40mm			
Steel, stainless steel, cast iron pipes with non-combustible insulation						
≤ 88,9	≥ 2	≥ 150	lamella mat ≥ 800mm x ≥ 40mm	rigid floor	≥ 150	EI 60-C/U
≤ 114,3	≥ 3,6		lamella mat ≥ 500mm x ≥ 40mm			
≤ 170	≥ 3		lamella mat ≥ 800mm x ≥ 60mm + lamella mat ≥ 500mm x ≥ 30mm*			
≤ 219,1	≥ 5					

* as additional protection

Application in penetration seals of mineral wool with ablative filler ArmaProtect ABLF (contd.)

Type	Seal thickness (mm)	Measures	Base material	Base material thickness (mm)	Classification
Double solar pipes "NanoSUN²" with intumescent wrap					
DN 16	⩾ 150	2x1 layer ArmaProtect FW2 (outside, wrap width = 125mm)	rigid floor	⩾ 150	EI 90-U/U
DN 40					EI 30-U/U (E 90-U/U)
Combustible pipes with intumescent wrap					
PVC-U pipe Ø ⩽ 32mm	⩾ 150	1x1 layer ArmaProtect FW2 (inside, centric, wrap width = 125mm)	rigid floor	⩾ 150	EI 90-U/U

Application in penetration seals of mineral wool with ablative filler ArmaProtect ABLF (without mineral wool)

Type	Seal thickness (mm)	Measures	Base material	Base material thickness (mm)	Classification
Cables and cable bundles					
Cables Ø ⩽ 21mm	⩾ 150	-	rigid floor	⩾ 150	EI 90

TECHNICAL DATA - ARMAPROTECT CB COATED BOARD SYSTEM

Brief description	ArmaProtect CB is an ablative coated board system to maintain the fire resistance performance of fire penetrations in walls and floors.
Material type	Mineral wool board with ablative firestop coating and ablative firestop filler mastic.
Additional material information	The entire system as well as the separate components (coated board, ablative firestop coating and ablative firestop filler mastic) are halogen- and solvent-free.
Product colour range	White
Special features	In a cured state, the ablative firestop coating (ArmaProtect ABLC) and ablative firestop filler mastic (ArmaProtect ABLF) are resistant against humidty, frost-dew-change and UV radiation.
Product range	Coated boards are packed as 4 pieces in a box. The length x width x height of the boards are as follows: - One-side coated board: 1000 mm x 600 mm x 60 mm with dry-film thickness of 0.7 mm - Two-side coated board: 1000 mm x 600 mm x 60 mm with dry-film thickness of 0.7 mm ArmaProtect ABLC ablative firestop coating is available in pails of 12.5 kg and 15 kg. ArmaProtect ABLF ablative firestop filler mastic is available as 310 ml cartridges with 12 cartridges packed in a carton.
Applications	Ablative coated board system for mixed fire seals in walls and floors for blank openings, mixed and multiple services, cables, cable bundles and cable trays and non-combustible and combustible pipes.
Installation	For professional use only. Refer to third party published listings, national approvals / assessments and Armacell's product literature for specific application details as well as before handling this product.
Declaration of Performance (DoP)	ArmaProtect CB

Approvals and compliance

Specification compliance	• ETA-22/0063 acc. EN 1366-3	• UL acc. UL 1479 (ASTM E814)		

Property	Value/Assessment	Standard/Test method
Temperature range		
Operating temperature	-40°C to +70°C (-40°F to 158°F)	
Application temperature	5°C to 25°C (41°F to 77°F)	
Storage and transportation temperature	ArmaProtect CB Coated firestop board: 5°C to 25°C (41°F to 77°F) ArmaProtect ABLC Firestop coating: 5°C to 25°C (41°F to 77°F) ArmaProtect ABLF Firestop filler mastic: 5°C to 25°C (41°F to 77°F)	
Mechanical properties		
Density	ArmaProtect ABLC Firestop coating: 1.34 - 1.48 g/cm^3 (at 20 °C) ArmaProtect ABLF Firestop filler mastic: 1.34 - 1.48 g/cm^3 (at 20 °C)	
Fire performance		
Reaction to fire	Class E	EN 13501-1
Resistance to fire	See Annex	
Health and environment		
Emission of dangerous substances	No dangerous substances.	ETAG 026-02
Volatile organic compounds (VOC) content	ArmaProtect ABLC Firestop coating: < 50 g/l ArmaProtect ABLF Firestop filler mastic: < 50 g/l	GS-11, Green Seal Standard
Other technical features		
Durability and serviceability	Use category type X.	EOTA TR 024
Cure time	Dust-dry: > 4 h (23 °C / 65% relative humidity 2nd layer: > 8 h (23 °C / 65% relative humidity) Fully cured: > 4 d (23 °C / 65% relative humidity)	
Safety information	Please refer to the safety data sheet available on our website.	
Shelf life	Can be kept for at least 18 months if unopened and stored properly.[1]	
Storage	Store in a cool and dry place with an ambient temperature of 5 °C to 25 °C and protect from frost.	

[1] ArmaProtect ABLC Firestop coating and ArmaProtect ABLF Firestop filler mastic only.

ArmaProtect EXPS
Firestop sealant

INSTRUCTIONS FOR USE

Ensure that surfaces are dry and free of dust and grease.

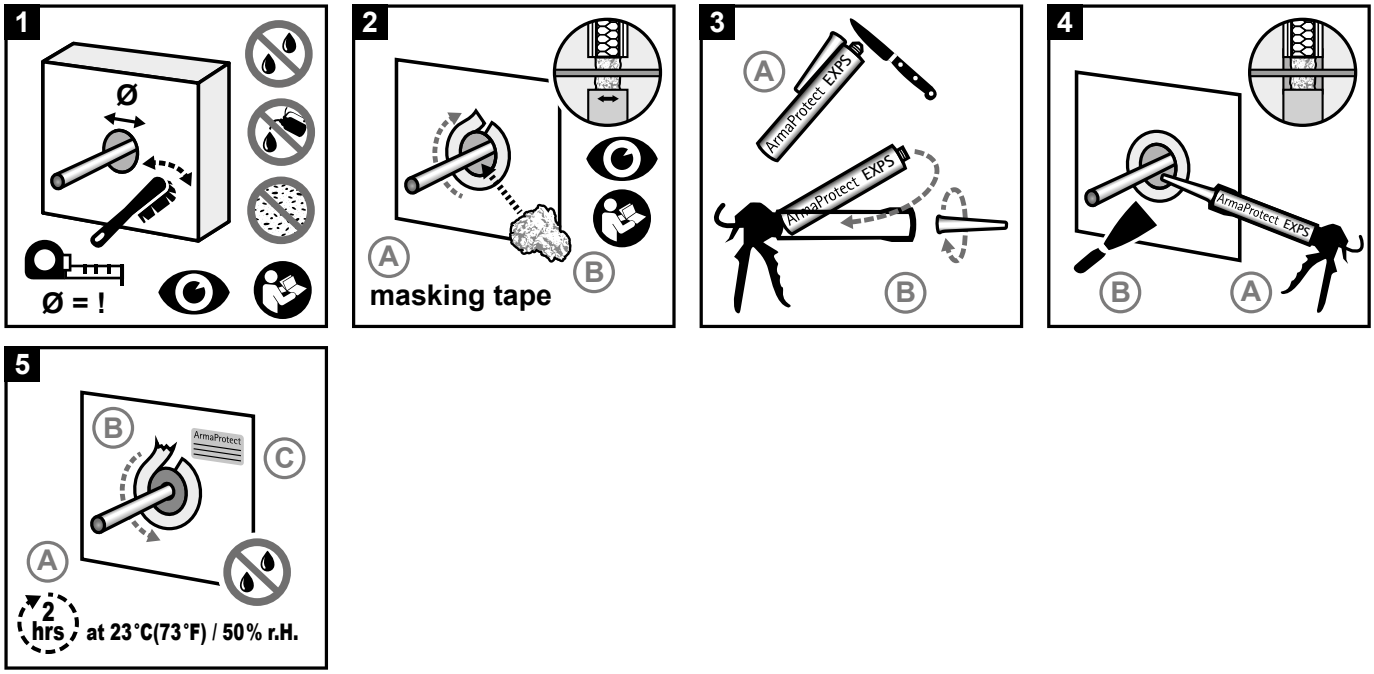

// Consumption guide

Approximate consumption [ml][1]			
Diameter of sealing size {mm]	0% services	30% servces	60% services
50	98	69	39
100	393	275	157
150	883	618	353

[1]Considering an installation depth of 25 mm on each side of the penetration.

Take note of potential material loss during application at the job site.

MAIN APPLICATIONS ACC. ETA-21/1025



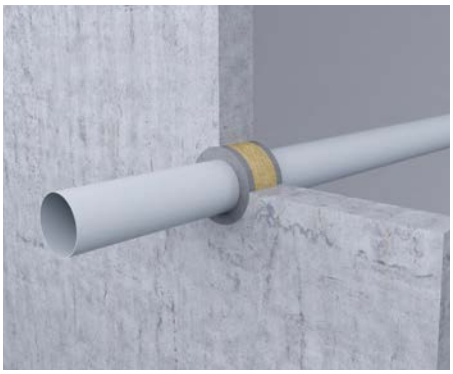

In drywalls, solid walls and concrete floors[1]	
Base material	Drywall, concrete wall, aerated concrete wall, masonry wall, concrete floor
Base material thickness	≥ 100 mm (wall) ≥ 150 mm (floor)
Seal thickness	≥ 100 mm (wall) ≥ 150 mm (floor)
Maximum seal size (wall)	Depends on medium, type of gland and closure material[1] Blank opening: ≤ Ø 150 mm
Maximum seal size (floor)	Depends on medium, type of gland and closure material[1] Blank opening: ≤ Ø 150 mm
Penetrants • Cables ≤ Ø 50 mm[1] • Cable bundles ≤ Ø 180 mm (with cables ≤ Ø 21 mm)[1] • Plastic conduits ≤ Ø 32 mm (with cables ≤ Ø 21 mm)[1] • Plastic conduit bundles ≤ Ø 90 mm (conduits ≤ Ø 32 mm, with cables ≤ Ø 21 mm)[1] • Non-combustible pipe without insulation (steel pipes ≤ Ø 48.3 mm, copper pipes ≤ Ø 22 mm)[1] • Combustible pipes ≤ Ø 110 mm[1]	up to EI 120[1]

[1] See ETA 21/1025 for further installation details.

// Field of application and installation details[1]

Installation details

Base material thickness	
Flexible wall (drywall) or rigid wall (concrete, aerated concrete, masonry)	≥ 100mm
Shaft wall	≥ 2 x 20mm
Rigid floor (concrete, aerated concrete (density ≥ 650 kg/m³)	≥ 150mm

Annular gap	Wall/floor (backfilling with mineral wool): ≥ 10mm ≤ 50mm Wall/floor (without backfilling): ≥ 10mm ≤ 25mm Shaft wall (without backfilling): ≥ 10mm ≤ 25mm
Gap filler	ArmaProtect EXPS with installation depth of ≥25mm (for wall/floor) and ≥20mm (for shaft wall) with loose mineral wool as back filling on each side of the penetration

First support of the services both-sided of the separating element	
Wall	≤ 500mm
Shaft wall	≤ 600mm
Floor	≤ 500mm

Distances	
Wall	≥ 100mm (between single penetrations) ≥ 100mm (to other openings and installations)
Shaft wall	≥ 100mm (between single penetrations) ≥ 100mm (to other openings and installations)" ≥ 0mm (between multi-layer pipes KE KELIT KM 110 (Ø ≤ 32mm inline))
Floor	≥ 100mm (between single penetrations) ≥ 0mm (between non-insulated steel pipes Ø ≤ 48,3mm) ≥ 100mm (to other openings and installations)

[1] Please see further installation detail in the ETA-21/1025

Applications

Application in flexible wall

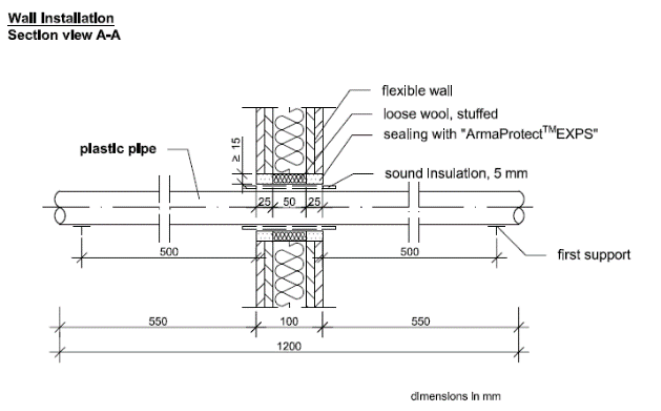

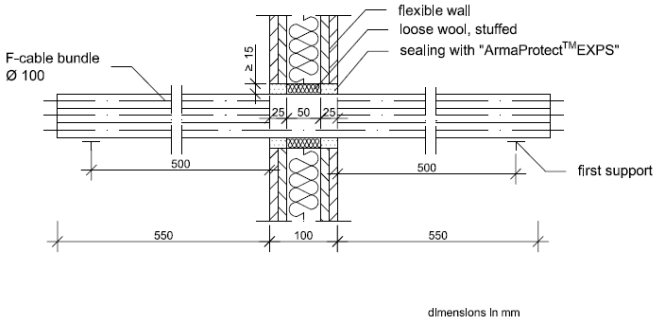

Application in rigid wall

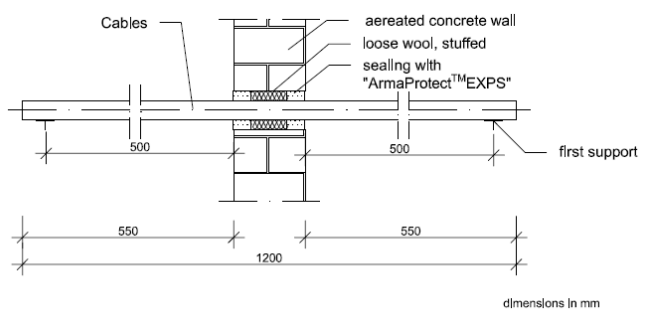

Application in rigid floor

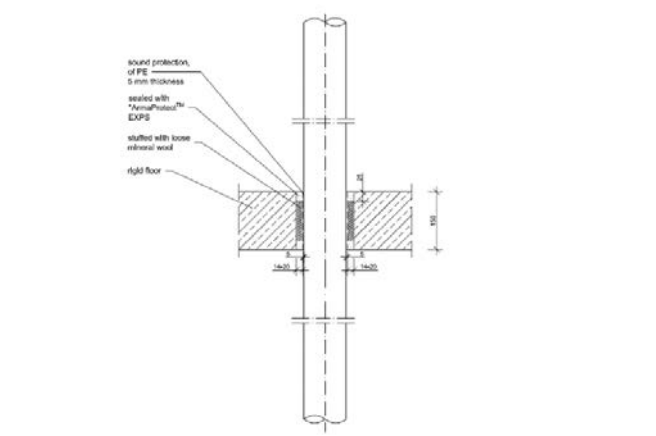

Resistance to Fire

Wall application

Electrical installations

Type	Seal thickness (mm)	Base material	Base material thickness (mm)	Backfilling	Classification
Cables Ø ⩽ 21 mm	⩾ 100	flexible wall & rigid wall	⩾ 100	+	EI 120
Cables Ø ⩽ 47 mm (type E-YCWY 4x95RM)					EI 90
Cables Ø ⩽ 61 mm (type H07RN-F 4G95)					
Cable bundles Ø ⩽ 100 mm with cables Ø ⩽ 21 mm					EI 120
Cable bundles Ø ⩽ 180 mm with cables Ø ⩽ 21 mm		rigid wall			
Cable bundles Ø ⩽ 180 mm with cablesØ ⩽ 21 mm		flexible wall			EI 90
Single conduits Ø ⩽ 32 mm with/ without cables (Ø ⩽ 21 mm)		flexible wall & rigid wall			EI 120-U/U
Plastic conduit bundles ⩽ 100 mm (conduits Ø ⩽ 32 mm) with/ without cables (Ø ⩽ 21 mm)					EI 60-U/U

Wave guides

Type	Seal thickness (mm)	Base material	Base material thickness (mm)	Backfilling	Classification
RFS CELLFLEX CLF, Ø ⩽ 50,3mm	⩾ 100	flexible wall &	⩾ 100	+	EI 120-U/C
RFS RADFLEX RLK, Ø ⩽ 48,2mm					
CommScope HELIAX AVA, Ø ⩽ 51,1mm					

HVAC split line combinations

Type	Measures	Seal thickness (mm)	Base material	Base material thickness (mm)	Backfilling	Classification
Max. 2 pipes (Ø ⩽ 18 mm, wall thickness 1 – 14,2 mm) with pipe insulation 9mm thick made of PE foam + max. 1 PVC-U/PVC-C pipe (Ø ⩽ 25mm, wall thickness 1,5mm) + max. 2 cables (Ø ⩽ 14mm)	Lamella mat (LI/CI) 2 x ⩾ 250 x 30	⩾ 100	flexible wall & rigid wall	⩾ 100	+	EI 120
Max. 2 pipes (Ø = ⩽ 22 mm mm, wall thickness 1 – 14,2 mm) with pipe insulation 9mm thick made of PE foam + max. 1 PVC-U/PVC-C pipe (Ø ⩽ 25mm, wall thickness 1,5mm) + max. 2 cables (Ø ⩽ 14mm)	-					EI 90
Max. 2 pipes (Ø = ⩽ 22 mm mm, wall thickness 1 – 14,2 mm) with pipe insulation 9mm thick made of PE foam						EI 120-C/U

Non-combustible pipes

Pipe type	Pipe Ø (mm)	Pipe wall thickness (mm)	Seal thickness (mm)	Base material material	Base thickness (mm)	Backfilling	Classification
Steel, stainless steel, cast iron pipes	26,9	2	⩾ 100	flexible wall & rigid wall	⩾ 100	+	EI 90-C/U

Pipe type	Pipe Ø (mm)	Pipe wall thickness (mm)	Lamella mat (mm)	Seal thickness (mm)	Base material	Base material thickness (mm)	Backfilling	Classification
Non-combustible pipes with lamella mat insulation (LS/CS)								
Copper, steel, stainless steel, cast iron pipes	⩽ 54	1 – 14,2	⩾ 1000 mm x 30 - 60 mm	⩾ 100	flexible wall & rigid wall	⩾ 100	+ / -	EI 120-C/U
	⩽ 88,9	1,5 – 14,2	⩾ 1500 mm x 30 - 60 mm				+	EI 90-C/U
Steel, stainless steel, cast iron pipes	⩽ 54	1 – 14,2	⩾ 1000 mm x 30 - 60 mm				+ / -	EI 120-C/U
	⩽ 114		⩾ 1500 mm x 30 - 60 mm					
Non-combustible pipes with lamella mat insulation (LI/CI)								
Copper, steel, stainless steel, cast iron pipes	⩽ 54	1,5 – 14,2	2 x ⩾ 500 mm x 30 mm	⩾ 100	flexible wall & rigid wall	⩾ 100	-	EI 120-C/U
Steel, stainless steel, cast iron pipes	⩽ 88,9		2 x ⩾ 500 mm x 30 - 60mm					
	⩽ 114		2 x ⩾ 500 mm x 60 mm					
Non-combustible pipes with pipe shell insulation (CS)								
Copper, steel, stainless steel, cast iron pipes	⩽ 88,9	1 – 14,2	30	⩾ 100	flexible wall & rigid wall	⩾ 100	+	EI 120-C/U
							-	EI 90-C/U
Steel, stainless steel, cast iron pipes	⩽ 54		20 – 30				+	EI 120-C/U
							-	EI 90-C/U
	⩽ 88,9		30 - 40				+	EI 120-C/U
							-	EI 90-C/U
	⩽ 114		40				+	EI 120-C/U
							-	EI 90-C/U
Non-combustible pipes with pipe shell insulation (LS/CS)								
Copper, steel, stainless steel, cast iron pipes	⩽ 28	1 – 14,2	⩾ 1250 mm x 19 - 25 mm	⩾ 100	flexible wall & rigid wall	⩾ 100	+ / -	EI 120-C/U
	⩽ 42		⩾ 1250 mm x 25 mm					
			⩾ 1250 mm x 19 - 38 mm				+	
	⩽ 54		⩾ 1250 mm x 38 mm				-	EI 60-C/U
							+	EI 120-C/U

Multi-layer pipes

Pipe type	Pipe Ø (mm)	Pipe wall thickness (mm)	Seal thickness (mm)	Base material material	Base thickness (mm)	Backfilling	Classification
Multi-layer pipes with/without 5 mm PE sound insulation							
Geberit Mepla	16	2,25	≥ 100	flexible wall & rigid wall	≥ 100	+	EI 120-U/C
						-	EI 90-U/C
	≤ 50	2,25 - 4				+	
	≤ 75	2,25 – 4,7					EI 30-U/C
KE KELIT KELOX KM 110	16	2					EI 120-U/C
						-	EI 90-U/C
	≤ 75	2 – 7,5				+	
Uponor Unipipe Plus	≤ 32	2 - 3					EI 120-U/C
						-	EI 90-U/C
	32	3					EI 120-U/C
Rehau Rautitan stabil	≤ 40	2 - 6				+	
						-	EI 90-U/C
alpex F50	≤ 32	2 - 3				+	EI 120-U/C
alpex L	40	3,5				+ / -	
	≤ 40	2,6 – 3,5				-	EI 90-U/C
	≤ 75	3,5 - 5				+	EI 30-U/C

Combustible pipes

Pipe type	Pipe Ø (mm)	Pipe wall thickness (mm)	Seal thickness (mm)	Base material material	Base thickness (mm)	Backfilling	Classification
PVC-U	⩽ 50	1,8	⩾ 100	flexible wall & rigid wall	⩾ 100	-	EI 120-U/U
	⩽ 75						EI 90-U/U
	⩽ 110	1,8 – 8,1				+ / -	EI 120-U/C
PE, PE-X, ABS, SAN + PVC	⩽ 50	1,8				-	EI 120-U/U
	⩽ 75	1,8 – 1,9					EI 90-U/U
	⩽ 110	1,8 – 10				+ / -	EI 120-U/C
PP-H	⩽ 50	1,8				-	EI 120-U/U
	⩽ 75	1,8 – 1,9					EI 90-U/U
	⩽ 110	1,8 – 10				+ / -	EI 120-U/C
Friatec Friaphone	52 - 110	2,8 – 5,3					
Pipelife Master 3	50	2				-	EI 120-U/U
	50 - 110	1,8 - 3				+ / -	EI 120-U/C
Poloplast POLO-KAL 3S	75	3,8				-	EI 60-U/U
	75 - 110	3,8 – 4,8				+ / -	EI 120-U/C
Poloplast POLO-KAL NG	50	2				-	EI 120-U/U
Poloplast POLO-KAL XS	50	2					
Geberit Silent Pro	50	3,2					
	50 - 110	3 – 4,5				+ / -	EI 90-U/C
Geberit Silent PP	50	2				-	EI 120-U/U
Geberit Silent dB	56	3,2					
Rehau Raupiano Plus	50	1,8					
Conel Drain	50	1,8					
Ostendorf Skolan SAFE dB	58	4					
Georg Fischer Silenta Premium	58	5,3					
Valsir Triplus	50	1,8					
Wavin AS+	50	3					EI 90-U/U
Wavin SiTech+	50	2,1					

Shaft wall application

Combustible pipes

Pipe type	Pipe Ø (mm)	Pipe wall thickness (mm)	Seal thickness (mm)	Base material material	Base thickness (mm)	Backfilling	Classification
Combustible pipes without sound insulation							
Poloplast POLO-KAL NG	50	2	≥ 40	shaft wall	≥ 40	-	EI 90-U/U
Poloplast POLO-KAL XS							
Geberit Silent PP							
Combustible pipes with 19 mm FEF insulation							
Poloplast POLO-KAL NG	50	2	≥ 40	shaft wall	≥ 40	-	EI 90-U/U
Poloplast POLO-KAL XS							
Geberit Silent PP							
Multi-layer pipes with/without 5 mm PE sound insulation							
Geberit Mepla	25 – 32	3	≥ 40	shaft wall	≥ 40	-	EI 90-U/C
Rehau Rautitan stabil		3,7 – 4,7					
KE KELIT KELOX KM 110	20 – 32	2,5 – 3					
Multi-layer pipes with 19 mm FEF insulation							
Geberit Mepla	25 – 32	3	≥ 40	shaft wall	≥ 40	-	EI 90-U/C
Rehau Rautitan stabil		3,7 – 4,7					
KE KELIT KELOX KM 110	25 – 32	2,5 – 3					

Floor application

Blank openings

Type	Seal thickness (mm)	Base material	Base material thickness (mm)	Classification
Blank penetration Ø ≤ 150mm	≥ 150	rigid floor	≥ 150	EI 120

Electrical installations

Type	Seal thickness (mm)	Base material	Base material thickness (mm)	Backfilling	Classification
Cables Ø ≤ 21 mm	≥ 150	rigid floor	≥ 150	+	EI 120
Cables Ø ≤ 50 mm					EI 60
Cable bundles Ø ≤ 150 mm with cables Ø ≤ 21 mm					EI 120
Single conduits Ø ≤ 32 mm with/ without cables (Ø ≤ 21 mm)					EI 120-U/U
Plastic conduit bundles ≤ 90 mm (conduits Ø ≤ 32 mm) with/ without cables (Ø ≤ 21 mm)					

Wave guides

Type	Seal thickness (mm)	Base material	Base material thickness (mm)	Backfilling	Classification
RFS CELLFLEX CLF, Ø ≤ 50,3mm	≥ 150	rigid floor	≥ 150	+	EI 120-U/C
RFS RADFLEX RLK, Ø ≤ 48,2mm					
CommScope HELIAX AVA, Ø ≤ 51,1mm					

HVAC split line combinations

Type	Measures	Seal thickness (mm)	Base material	Base material thickness (mm)	Backfilling	Classification
Max. 2 pipes (Ø = ≤ 22 mm mm, wall thickness 1 – 14,2 mm) with pipe insulation 9mm thick made of PE foam + max. 1 PVC-U/PVC-C pipe (Ø ≤ 25mm, wall thickness 1,5mm) + max. 2 cables (Ø ≤ 14mm)	-	≥ 100	flexible wall & rigid wall	≥ 100	+	EI 120
Max. 2 pipes (Ø = ≤ 22 mm mm, wall thickness 1 – 14,2 mm) with pipe insulation 9mm thick made of PE foam						EI 120-C/U

Non-combustible pipes

Pipe type	Pipe Ø (mm)	Pipe wall thickness (mm)	Seal thickness (mm)	Base material material	Base thickness (mm)	Backfilling	Classification
Non-combustible pipes without insulation							
Copper, steel, stainless steel, cast iron pipes	⩽ 15	1	⩾ 200	rigid floor	⩾ 200	-	EI 120-C/U
	⩽ 18						EI 90-C/U
	⩽ 12						EI 60-C/U
Steel, stainless steel, cast iron pipes	⩽ 42,4	2,3 – 14,2	⩾ 150		⩾ 150	+ / -	EI 120-C/U
	⩽ 48,3	2,1 – 14,2	⩾ 200		⩾ 200		
			⩾ 150		⩾ 150	+	EI 90-C/U*

*Zero distance between pipes

Pipe type	Pipe Ø (mm)	Pipe wall thickness (mm)	Lamella mat (mm)	Seal thickness (mm)	Base material	Base material thickness (mm)	Backfilling	Classification
Non-combustible pipes with lamella mat insulation (LS/CS)								
Copper, steel, stainless steel, cast iron pipes	⩽ 54	1 – 14,2	⩾ 1000 mm x 30 - 60 mm	⩾ 150	rigid floor	⩾ 150	+ / -	EI 120-C/U
	⩽ 76		⩾ 1500 mm x 30 - 60 mm				-	
	⩽ 88,9	1,5 – 14,2					+	EI 90-C/U
		1 – 14,2	⩾ 1500 mm x 60 mm				-	EI 120-C/U
Steel, stainless steel, cast iron pipes	⩽ 54		⩾ 1000 mm x 30 - 60 mm				+ / -	
	⩽ 114		⩾ 1500 mm x 30 - 60 mm					
Non-combustible pipes with lamella mat insulation (LI/CI)								
Copper, steel, stainless steel, cast iron pipes	⩽ 54	1,5 – 14,2	2 x ⩾ 500 mm x 30 mm	⩾ 150	rigid floor	⩾ 150	-	EI 120-C/U
Steel, stainless steel, cast iron pipes	⩽ 88,9		2 x ⩾ 500 mm x 30 - 60mm					
	⩽ 114		2 x ⩾ 500 mm x 60 mm					
			2 x ⩾ 500 mm x 30 - 60 mm					

Non-combustible pipes (contd.)

Pipe type	Pipe Ø (mm)	Pipe wall thickness (mm)	Lamella mat (mm)	Seal thickness (mm)	Base material	Base material thickness (mm)	Backfilling	Classification
Non-combustible pipes with pipe shell insulation (CS)								
Copper, steel, stainless steel, cast iron pipes	⩽ 54	1 – 14,2	20 – 30	⩾ 150	rigid floor	⩾ 150	+ / -	EI 120-C/U
	⩽ 88,9		30					
Steel, stainless steel, cast iron pipes	⩽ 54		20 – 30					
	⩽ 88,9		30 - 40					
	⩽ 114		40					
Non-combustible pipes with FEF insulation (LS/CS)								
Copper, steel, stainless steel, cast iron pipes	⩽ 28	1 – 14,2	⩾ 1250 mm x 19 - 25 mm	⩾ 150	rigid floor	⩾ 150	+ / -	EI 120-C/U
	⩽ 42		⩾ 1250 mm x 25 mm					
			⩾ 1250 mm x 19 - 38 mm				+	
	⩽ 54		⩾ 1250 mm x 38 mm				+ / -	

Combustible pipes

Pipe type	Pipe Ø (mm)	Pipe wall thickness (mm)	Seal thickness (mm)	Base material material	Base thickness (mm)	Backfilling	Classification
PVC-U	⩽ 50	1,8	⩾ 150	rigid floor	⩾ 150	-	EI 120-U/U
	⩽ 75						
	⩽ 110	1,8 – 8,1				+ / -	
PE, PE-X, ABS, SAN + PVC	⩽ 50	1,8				-	
	⩽ 110	1,8 – 10				+ / -	
PP-H	⩽ 50	1,8				-	
	⩽ 110	1,8 – 10				+ / -	EI 120-U/C
Friatec Friaphone	52 - 110	2,8 – 5,3					
Pipelife Master 3	50 - 110	1,8 - 3					
Poloplast POLO-KAL 3S	75 - 110	3,8 – 4,8					
Poloplast POLO-KAL NG	50 - 110	2 – 3,4					
Poloplast POLO-KAL XS	50 - 110	2 – 3,4					
Geberit Silent Pro	50 - 110	3 – 4,5					
Geberit Silent PP	50 - 110	2 – 3,6					
Geberit Silent dB	56 - 110	2 – 3,6					
Rehau Raupiano Plus	50 - 110	1,8 – 2,7					
Ostendorf Skolan SAFE dB	58 - 110	4 – 5,3					
Valsir Triplus	50 - 110	1,8 – 3,4					
Wavin SiTech+	32 - 110	1,8 – 3,4					

Multi-layer pipes

Pipe type	Pipe Ø (mm)	Pipe wall thickness (mm)	Seal thickness (mm)	Base material material	Base thickness (mm)	Backfilling	Classification
Multi-layer pipes with/without 5 mm PE sound insulation							
Geberit Mepla	16	2,25	⩾ 100	flexible wall & rigid wall	⩾ 100	+/-	EI 120-U/C
	⩽ 50	2,25 - 4					
	⩽ 75	2,25 – 4,7				+	
KE KELIT KELOX KM 110	16	2					
	⩽ 75	2 – 7,5					
Uponor Unipipe Plus	⩽ 32	2 - 3					
Rehau Rautitan stabil	⩽ 40	2 - 6					
alpex F50	⩽ 32	2 - 3					
alpex L	40	3,5				+ / -	
	⩽ 75	3,5 - 5					

TECHNICAL DATA - ARMAPROTECT EXPS FIRESTOP SEALANT

Brief description	ArmaProtect EXPS is an intumescent firestop sealant used to maintain the fire resistance performance of fire penetrations in walls and floors.
Material type	Intumescent firestop sealant
Additional material information	Paste-like consistency
Product colour range	Grey
Product range	Available as 310 ml cartridges and packed as 12 cartridges in a carton.
Applications	Firestop sealant for fire seals in walls and floors for blank openings, cables, cable bundles, non-combustible and combustible pipes.
Installation	For professional use only. Refer to third party published listings, national approvals / assessments and Armacell's product literature for specific application details as well as before handling this product.
Declaration of Performance (DoP)	ArmaProtect EXPS

Approvals and compliance	
Specification compliance	• ETA 21 /1025 acc. EN 1366-3

Property	Value/Assessment	Standard/Test method
Temperature range		
Operating temperature	-40°C to 70°C (40°F to 158°F)	
Application temperature	5°C to 25°C (41°F to 77°F)	
Storage and transportation temperature	5°C to 25°C (41°F to 77°F)	
Mechanical properties		
Density	1300 kg/m^3 ± 10%	
Foaming factor	15 - 26.5 fold	
Expansion pressure	1.0 - 1.9 N/mm^2	
Fire performance		
Reaction to fire	Class E	EN 13501-1
Resistance to fire	See Annex	
Health and environment		
Emission of dangerous substances	No dangerous substances.	ETAG 026-02
Other technical features		
Durability and serviceability	Use category type X	EOTA TR 024
Safety information	Please refer to the safety data sheet available on our website.	
Shelf life	Can be kept for at least 18 months unopened if stored properly.	
Storage	Store in a cool and dry place with an ambient temperature of 5 °C to 25 °C and protect from frost.	

ArmaProtect CT

Firestop cable tube

INSTRUCTIONS FOR USE

Ensure that surfaces are dry and free of dust and grease.

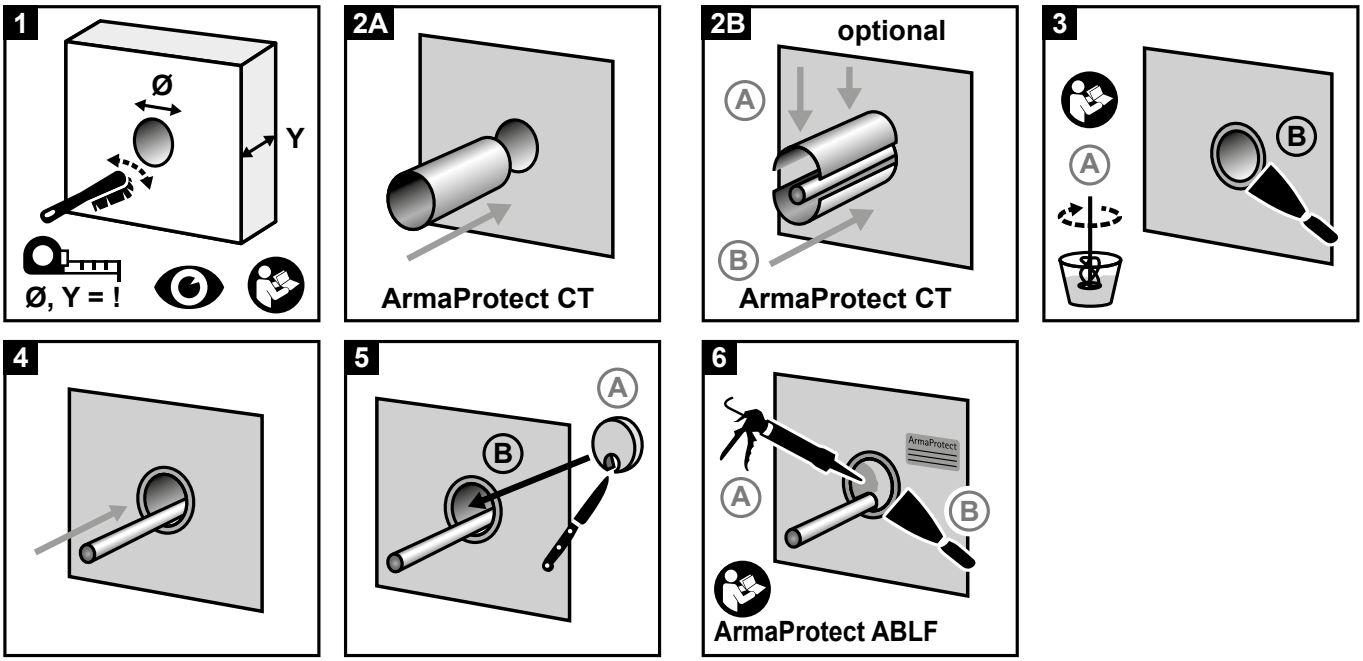

MAIN APPLICATIONS ACC. ETA-22/0062



in drywalls, solid walls and concrete floors[1]	
Base material	Drywall, concrete wall, aerated concrete wall, masonry wall, concrete floor
Base material thickness	≥ 100 mm (wall) ≥ 125 mm (floor)
Seal thickness	≥ 150 mm
Penetrants • Cables ≤ Ø 80 mm[1] • Cable bundles ≤ Ø 107 mm (with cables ≤ Ø 21 mm)[1] • Plastic conduits ≤ Ø 63 mm (with cables ≤ Ø 21 mm)[1] • Plastic conduit bundles ≤ Ø 107 mm (conduits ≤ Ø 32 mm, with cables ≤ Ø 21 mm)[1] • Wave guide cables ≤ Ø 28.5 mm[1] • PE lines "speed pipes" (24 x ≤ Ø 7.0 mm, 7 x ≤ Ø 10.0 mm, 5 x ≤ Ø 12.0 mm)[1] • Combustible pipes ≤ Ø 32 mm[1] • HVAC split-line-combinations[1]	up to EI 120[1]

[1] See ETA 22/0062 for further installation details.

// Field of application and installation details[1]

Installation details

Base material thickness	
Base material thickness	≥ 100mm
Flexible wall (drywall) or rigid wall (concrete, aerated concrete, masonry) Rigid floor (concrete, aerated concrete)	≥ 125mm

Annular gap	5 – 25mm
Gap filler for annular gap	Mineral construction material (class A1 or A2), eg. ArmaProtect CM, cement, mortar or gypsum
Sealing of soft foam plugs (melamine resin stopper) with ablative coating	ArmaProtect ABLC with ≥ 0,5mm dry film thickness
Intumescent wrap	ArmaProtect FW2 Fixation with steel wire Ø ≥ 1.0mm

First support of the services both-sided of the separating element	≤ 325mm from cable tube

[1] Please see further installation detail in the ETA-22/0062

Applications

Application in flexible wall and rigid floor

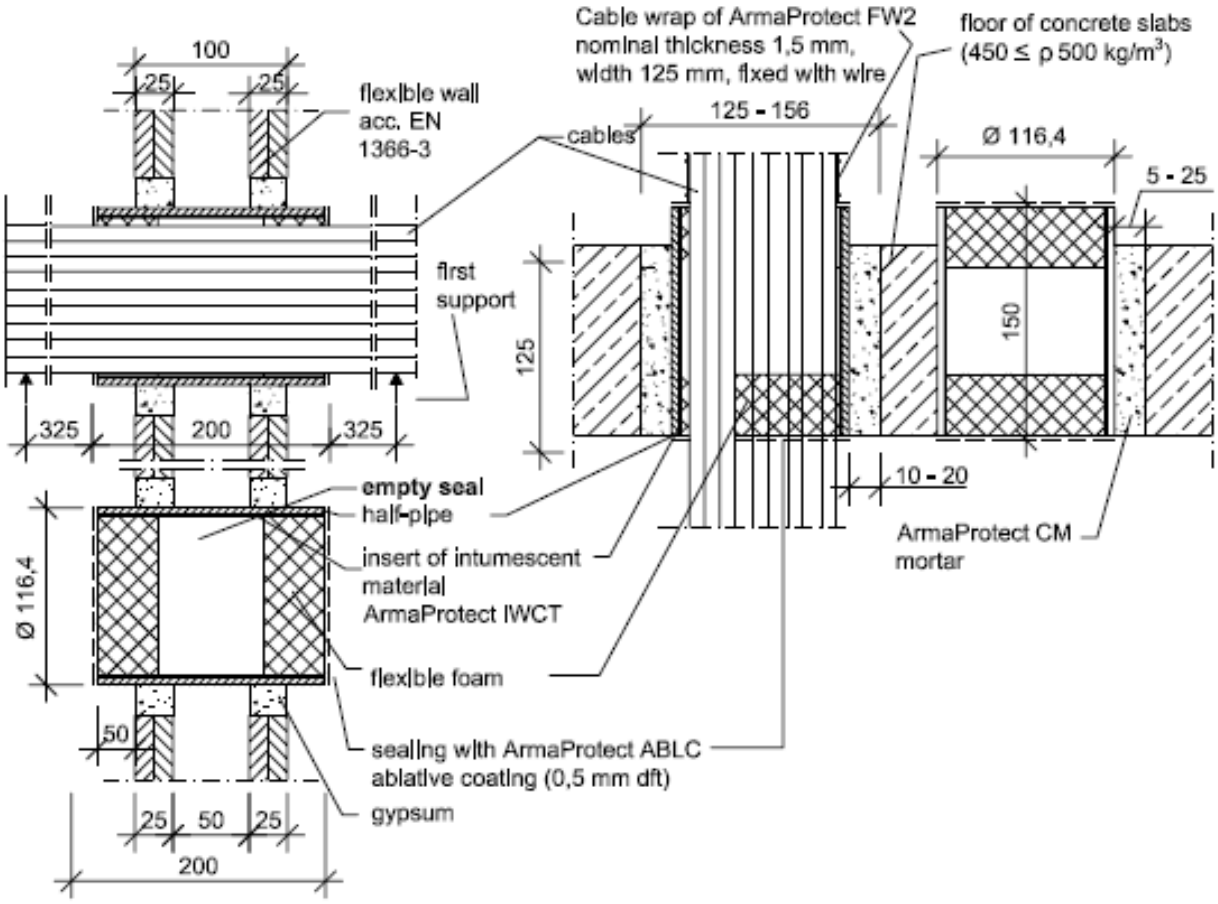

View, wall construction

View, floor construction

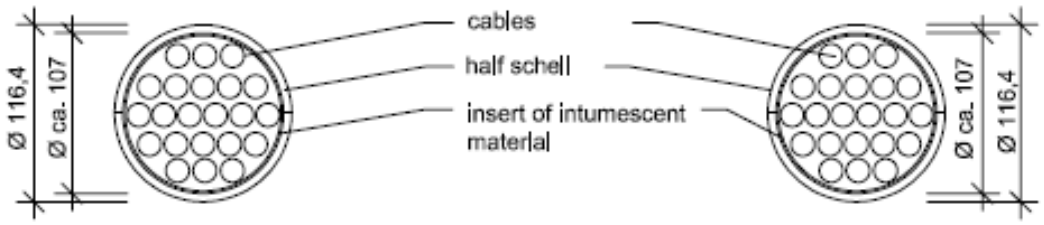

Configuration wall construction:
F-telecommunication cables, cablebundle Ø 100 mm
100% configuration of telecommunication cables
with PVC-insulation and copperwire
Type J-Y (St)Y 80 x 2 x 0,6 LG grey; Ø appr. 21 mm

Configuration floor construction:
F-telecommunication cables, cablebundle Ø 107 mm
100% configuration of telecommunication cables
20 x 2 x 0,6 mm
Type A2-Y (L) 2Y St III BD, Insulation PE / PE

dimensions are in mm

Application in flexible wall, rigid wall and rigis floor for single cables

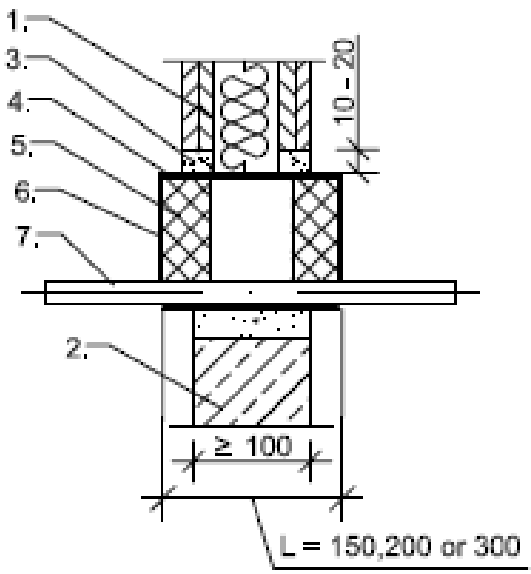

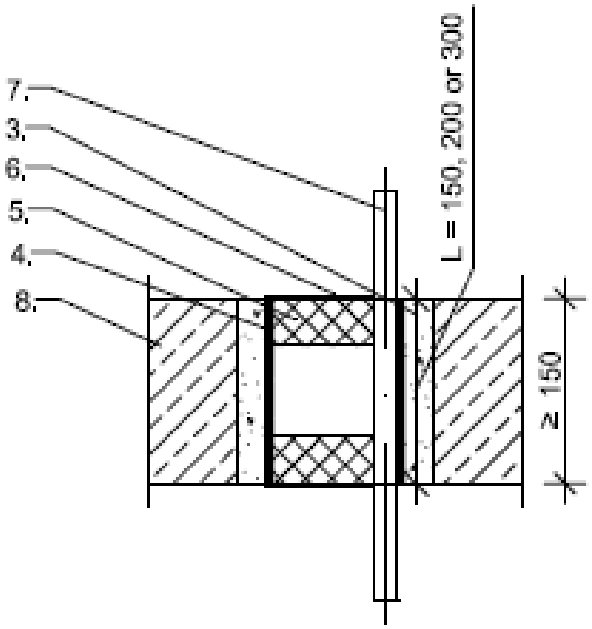

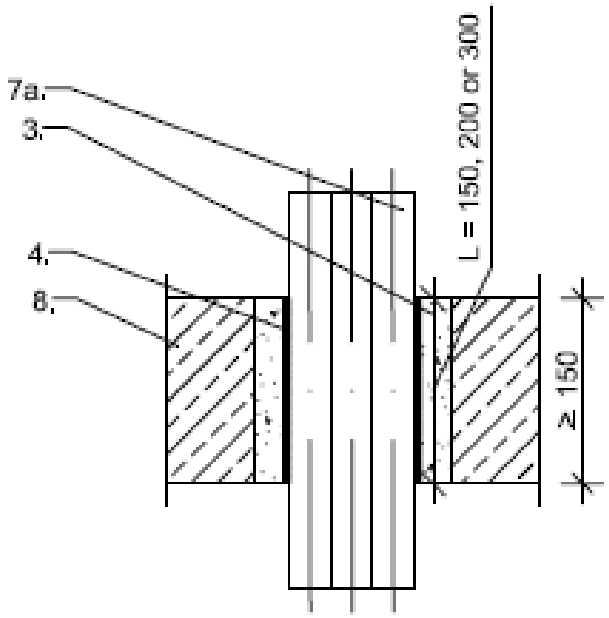

1. flexible wall
2. rigid wall
3. mortar or gypsum
4. Cable Tube
5. Melamin resin stopper
6. ablative coating
7. cable (for details see table)
7a. cable Ø ≤ 50 mm (100% configuration)
8. floor

dimensions in mm

Application in flexible wall, rigid wall and rigid floor for cable bundles with additional measures

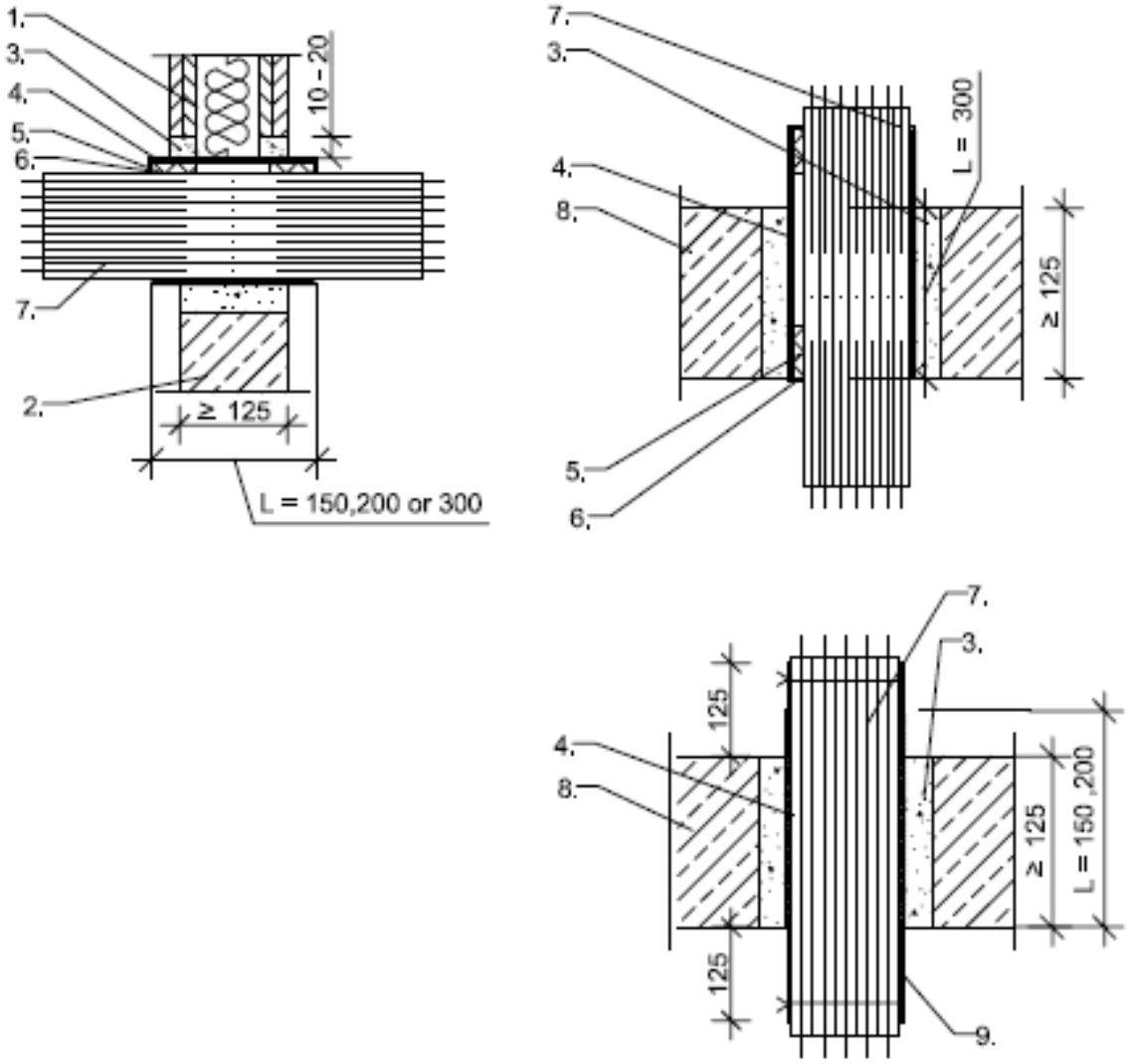

1. flexible wall
2. rigid wall
3. mortar or gypsum
4. Cable Tube
5. Melamin resin stopper
6. ablative coating
7. cablebundle Ø ≤ 100 mm (for details see table)
8. floor
9. Intumescent wrap (above or below)

dimensions in mm

Application in flexible wall, rigid wall and rigid floor for conduits (single conduits or conduit bundles, with and without cables)

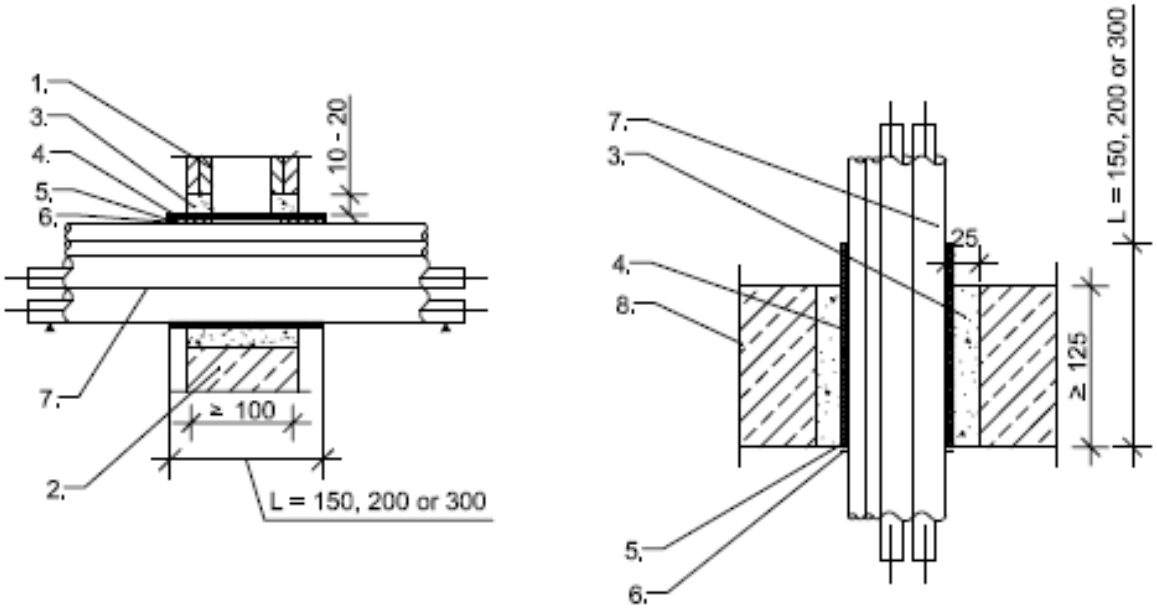

1. flexible wall
2. rigid wall
3. mortar or gypsum
4. Cable Tube
5. Melamin resin stopper
6. ablative coating
7. conduits (with or without cables)
8. floor

dimensions in mm

Application in flexible wall and rigid wall for wave guides

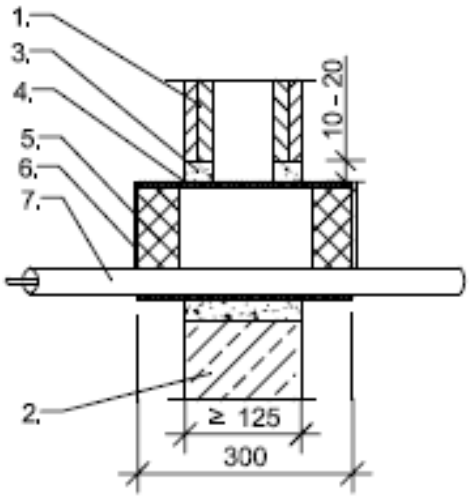

1. flexible wall
2. rigid wall
3. mortar or gypsum
4. Cable Tube
5. Melamin resin stopper
6. ablative coating
7. wave guide

dimensions in mm

Application in rigid floor for speed pipes (single speed pipes or speed pipes bundles, with and without glass fibre cables

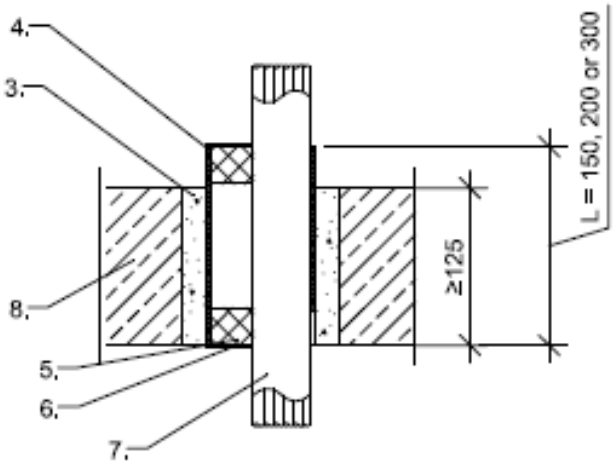

3. mortar or gypsum
4. Cable Tube
5. Melamin resin stopper
6. ablative coating
7. speed pipes
8. floor

dimensions in mm

Application in flexible wall and rigid wall for HVAC split line combinations

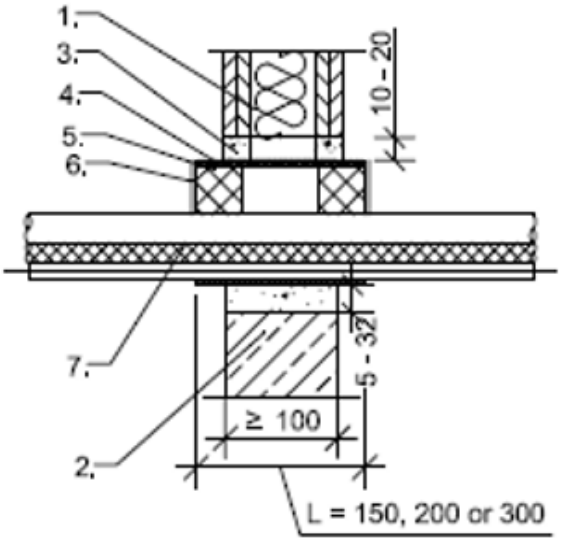

Application in rigid floor for for HVAC split line combinations

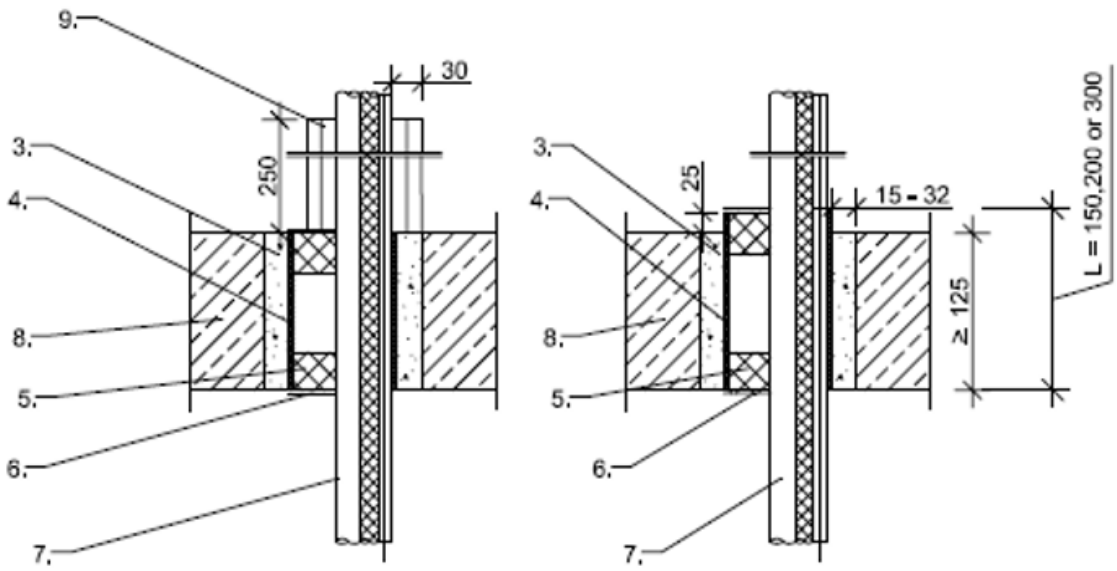

1. flexible wall
2. rigid wall
3. mortar or gypsum
4. Cable Tube
5. Melamin resin stopper
6. ablative coating
7. HVAC split lines combinations
8. floor
9. lamella mat

dimensions in mm

Application in flexible wall and rigid wall for combustible pipes

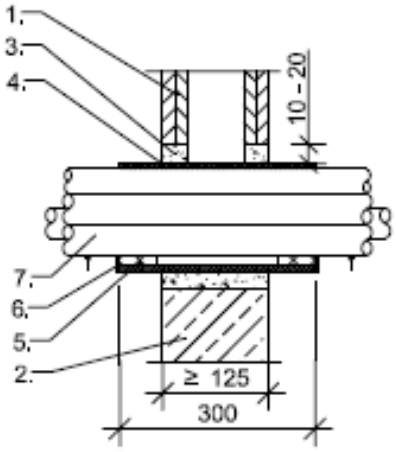

1. flexible wall
2. rigid wall
3. mortar or gypsum
4. Cable Tube
5. Melamin resin stopper
6. ablative coating
7. combustible pipes

dimensions in mm

Resistance to fire

Wall application

ArmaProtect CT Cable Tube – installation length 150mm (type S)

Type	Measures	Base material	Base material thickness (mm)	Classification
Cables and cable bundles				
Cables Ø ≤ 21mm	-	flexible wall & rigid wall	≥ 100	EI 90 (E 120)
Cable bundle Ø ≤ 100 % with cables Ø ≤ 21mm				
Conduits and conduit bundles				
Conduits Ø ≤ 40mm (with/without cables Ø ≤ 21mm)	-	flexible wall & rigid wall	≥ 100	EI 90-U/U (E 120-U/U)
Conduit bundle Ø ≤ 90mm with conduits Ø ≤ 40mm (with/without cables Ø ≤ 21mm)				
HVAC split line combinations				
Pipe/pipe (Ø = 6 - 10mm/ 10 - 18mm) with pipe insulation 9mm thick made of PE foam + PE-100 pipe (Ø ≤ 25mm, depth 1,5mm (U/U)) + max. 3 cables (Ø ≤ 14mm)	-	flexible wall & rigid wall	≥ 100	EI 90-U/U
Speed pipes (single speed pipes or speed pipe bundles, with and without glass fibre cables				
7mm ≤ Ø ≤ 14mm bundle ≤ 100 %	-	flexible wall & rigid wall	≥ 100	EI 120-U/U

ArmaProtect CT Cable Tube – installation length 200mm (type M)

Type	Measures	Base material	Base material thickness (mm)	Classification
Cables and cable bundles				
Cables Ø ≤ 21mm	-	flexible wall & rigid wall	≥ 100	EI 120
Cable bundle Ø ≤ 100 % with cables Ø ≤ 21mm				
Conduits and conduit bundles				
Conduits Ø ≤ 40mm (with/without cables Ø ≤ 21mm)	-	flexible wall & rigid wall	≥ 100	EI 120-U/U
Conduit bundle Ø ≤ 90mm with conduits Ø ≤ 40mm (with/without cables Ø ≤ 21mm)				
Conduit bundle Ø ≤ 100 % with conduits Ø ≤ 32mm (with/without cables Ø ≤ 21mm)				
HVAC split line combinations				
Pipe/pipe (Ø = 6 - 10mm/ 10 - 18mm) with pipe insulation 9mm thick made of PE foam + PE-100 pipe (Ø ≤ 25mm, depth 1,5mm (U/U)) + max. 3 cables (Ø ≤ 14mm)	-	flexible wall & rigid wall	≥ 100	EI 90-U/U
PE lines ("speed pipes" - single "speed pipes" or "speed pipe" bundles, with and without glass fibre cables)				
7mm ≤ Ø ≤ 14mm bundle ≤ 100 %	-	flexible wall & rigid wall	≥ 100	EI 120-U/U

ArmaProtect CT Cable Tube – installation length 300mm (type L)

Type	Measures	Base material	Base material thickness (mm)	Classification
Cables and cable bundles				
Cables Ø ≤ 21mm	-	flexible wall & rigid wall	≥ 100	EI 120
Cables Ø ≤ 50mm				EI 90 (E 120)
Cables Ø ≤ 80mm		rigid wall		
Cable bundle Ø ≤ 100 % (with cables Ø ≤ 21mm)		flexible wall & rigid wall		EI 120
Wave guides				
CommScope HELIAX LDF (low density foam), Ø ≤ 16,002mm	-	flexible wall & rigid wall	≥ 100	EI 120-U/C
CommScope 50Ω braided CNT, Ø ≤ 15mm				
CommScope HELIAX AVA, Ø ≤ 28mm				EI 90-U/C (E 120-U/C)
CommScope HELIAX FSJ (super flexible), Ø ≤ 13,5mm				
RFS RADIAFLEX RLK, Ø ≤ 28,5mm				EI 120-U/C
RFS CELLFLEX LCF, Ø ≤ 27,8mm				
Conduits and conduit bundles				
Conduits Ø ≤ 40mm (with/without cables Ø ≤ 21mm)	-	flexible wall & rigid wall	≥ 100	EI 120-U/U
Conduit bundle Ø ≤ 90mm with conduits Ø ≤ 40mm (with/without cables)				
Conduit bundle Ø ≤ 100 % with conduits Ø ≤ 32mm (with/without cable Ø ≤ 21mm)				
HVAC split line combinations				
Pipe/pipe (Ø = 6 - 10mm/ 10 - 18mm) with pipe insulation 9mm thick made of PE foam + PE-100 pipe (Ø ≤ 25mm, depth 1,5mm (U/U)) + max. 3 cables (Ø ≤ 14mm)	-	flexible wall & rigid wall	≥ 100	EI 90-U/U
Speed pipes (single speed pipes or speed pipe bundles, with and without glass fibre cables				
7mm ≤ Ø ≤ 14mm bundle ≤ 100 %	-	flexible wall & rigid wall	≥ 100	EI 120-U/U
Combustible pipes				
PVC-U pipes with Ø 20mm x s 1.5mm to Ø 32mm x s 2.4mm	-	flexible wall & rigid wall	≥ 100	EI 120-U/U

Floor application

ArmaProtect CT Cable Tube – installation length 150mm (type S)

Type	Measures	Base material	Base material thickness (mm)	Classification
Cables and cable bundles				
Cables Ø ≤ 21mm	–	rigid floor	≥ 125	EI 120
Cables Ø ≤ 50mm	only 100% configuration			EI 90 (E 120)
Cable bundle Ø ≤ 100 % (with cables Ø ≤ 14mm)	-			EI 120
Cable bundle Ø ≤ 100 % (with cable Ø ≤ 21mm)	1x1-layer ArmaProtect FW2, 50mm overlap (outside, wrap width = 125mm), above or below			
Conduits and conduit bundles				
Conduits Ø ≤ 40mm (with/without cable Ø ≤ 21mm)	max. 3 pcs.	rigid floor	≥ 125	EI 90 U/U
HVAC split line combinations				
Pipe/pipe (Ø = 6 - 10mm/ 10 - 18mm) with pipe insulation 9mm thick made of PE foam + PE-100 pipe (Ø ≤ 25mm, depth 1,5mm (U/U)) + max. 3 cables (Ø ≤ 14mm)	-	rigid floor	≥ 125	EI 90-U/U
Pipe/pipe (Ø = 6 - 22mm/ 6 - 22mm) with pipe insulation 9mm thick made of PE foam + PE-100 pipe (Ø ≤ 25mm, depth 1,5mm (U/U)) + max 3 cables (Ø ≤ 14mm)	lamella mat ≥ 250mm x ≥ 30mm above			EI 120-U/U
PE lines ("speed pipes" - single "speed pipes" or "speed pipe" bundles, with and without glass fibre cables)				
max. 24 pcs. pipe outer-Ø ≤ 7mm	–	rigid floor	≥ 125	EI 120 U/U
max. 7 pcs. pipe outer-Ø ≤ 10mm				
max. 5 pcs. pipe outer-Ø ≤ 12mm				

ArmaProtect CT Cable Tube – installation length 200mm (type M)

Type	Measures	Base material	Base material thickness (mm)	Classification
Cables and cable bundles				
Cables Ø ≤ 21mm	–	rigid floor	≥ 125	EI 120
Cables Ø ≤ 50mm	only 100% configuration			EI 90 (E 120)
Cable bundle Ø ≤ 100 % (with cables Ø ≤ 14mm)	-			EI 120
Cable bundle Ø ≤ 100 % (with cable Ø ≤ 21mm)	-			EI 60 (E 90)
	1x1-layer ArmaProtect FW2, 50mm overlap (outside, wrap width = 125mm), above or below			EI 120
Conduits and conduit bundles				
Conduits Ø ≤ 32mm (with/without cable Ø ≤ 14mm)	max. 3 pcs.	rigid floor	≥ 125	EI 90 U/U
HVAC split line combinations				
Pipe 1/pipe 2 (Ø = 6 - 10mm / 10 - 18mm) with pipe insulation 9mm thick made of PE foam + PE-100 pipe (Ø ≤ 25mm, depth 1.5mm (U/U)) + max 3 cables (Ø ≤ 14mm)	–	rigid floor	≥ 125	EI 90-U/U
Pipe /pipe (Ø = 6 - 22mm/ 6 - 22mm) with pipe insulation 9mm thick made of PE foam + PE-100 pipe (Ø ≤ 25mm, depth 1.5mm (U/U)) + max 3 cables (Ø ≤ 14mm)	lamella mat ≥ 250mm x ≥ 30mm above			EI 120-U/U
PE lines ("speed pipes - single "speed pipes" or "speed pipe" bundles, with and without glass fibre cables)				
max. 24 pcs. pipe outer-Ø ≤ 7mm	-	rigid floor	≥ 125	EI 120 U/U
max. 7 pcs. pipe outer-Ø ≤ 10mm				
max. 5 pcs. pipe outer-Ø ≤ 12mm				

ArmaProtect CT Cable Tube – installation length 150mm (type S)

Type	Measures	Base material	Base material thickness (mm)	Classification
Cables and cable bundles				
Cables Ø ≤ 21mm	–	rigid floor	≥ 125	EI 120
Cables Ø ≤ 50mm				EI 60 (E 120)
	only 100% configuration			EI 90 (E 120)
	lamella mat ≥ 100mm x ≥ 30mm + 1x1-layer ArmaProtect FW2 (outside, wrap width = 125mm), above			EI 120
Cables Ø ≤ 80mm	-			EI 60 (E 120)
Cable bundle Ø ≤ 100 % (with cable Ø ≤ 21mm)				EI 120
Conduits and conduit bundles				
Conduits Ø ≤ 63mm (with/without cable Ø ≤ 21mm)	-	rigid floor	≥ 125	EI 120-U/U
Conduit bundle Ø ≤ 107mm with conduits Ø ≤ 32mm (with/without cable Ø ≤ 21mm)			≥ 200	
HVAC split line combinations				
Pipe /pipe (Ø = 6 - 10mm / 10 - 18mm) with pipe insulation 9mm thick made of PE foam + PE-100 pipe (Ø ≤ 25mm, depth 1.5mm (U/U)) + max 3 cables (Ø ≤ 14mm)	–	rigid floor	≥ 125	EI 90-U/U
Pipe /pipe (Ø= 6 - 22mm/ 6 - 22mm) with pipe insulation 9mm thick made of PE foam + PE-100 pipe (Ø ≤ 25mm, depth 1.5mm (U/U)) + max 3 cables (Ø ≤ 14mm)				EI 120-U/U
PE lines ("speed pipes - single "speed pipes" or "speed pipe" bundles, with and without glass fibre cables)				
max. 24 pcs. pipe outer-Ø ≤ 7mm	-	rigid floor	≥ 125	EI 120 U/U
max. 7 pcs. pipe outer-Ø ≤ 10mm				
max. 5 pcs. pipe outer-Ø ≤ 12mm				

TECHNICAL DATA - ARMAPROTECT CT FIRESTOP CABLE TUBE

Brief description	ArmaProtect CT consists for two half shells with intumescent inlay and a soft foam plug. It is designed for use as small penetration seals in core drillings or as cast-in-solutions.
Material type	PVC cable tube half shells with intumescent fabric inlay. Closure are made of soft foam plugs.
Additional material information	Half-shells can be closed with a click lock.
Product colour range	Grey half shells with red inner lining.
Special features	Ideal as a retrofitting device.
Product range	Cable tubes including soft foam plugs are available in lengths of 150 mm (foam plug diameter: 60 mm, 90 mm and 116 mm), 200 mm (foam plug diameter: 90 mm and 116 mm) and 300 mm (foam plug diameter: 90 mm and 116 mm).
Applications	Firestop device for fire seals in walls and floors for blank openings, cables, cable bundles, combustible pipes and HVAC split-line combinations.
Installation	For professional use only. Refer to third party published listings, national approvals / assessments and Armacell's product literature for specific application details as well as before handling this product.
Declaration of Performance (DoP)	ArmaProtect CT

Approvals and compliance			
Specification compliance	• ETA 22/0062 acc. EN 1366-3	• UL acc. UL 1979 (ASTM E814)	

[i] This is the footnote list relevant to the Approvals and compliance table.

Property	Value/Assessment	Standard/Test method
Temperature range		
Operating temperature	-40°C to 70°C (-40°F to 158°F)	
Application temperature	5°C to 25°C (41°F to 77°F)	
Storage and transportation temperature	5°C to 25°C (41°F to 77°F)	
Fire performance		
Reaction to fire	Class E	EN 13501-1
Resistance to fire	See Annex	
Acoustic performance		
Sound reduction	64 (-2;-6) dB Dn, e; Dn, w (C; Ctr)	
Health and environment		
Emission of dangerous substances	No dangerous substances.	ETA 22/0062
Other technical features		
Durability and serviceability	Use category type X.	EN 13501-1
Safety information	Please refer to the safety data sheet available on our website.	
Shelf life	No shelf life.	
Storage	Store in a cool and dry place with an ambient temperature of 5 °C to 25 °C and protect from frost.	

ArmaProtect FW2

Firestop wrap

INSTRUCTIONS FOR USE

Ensure that surfaces are dry and free of dust and grease.

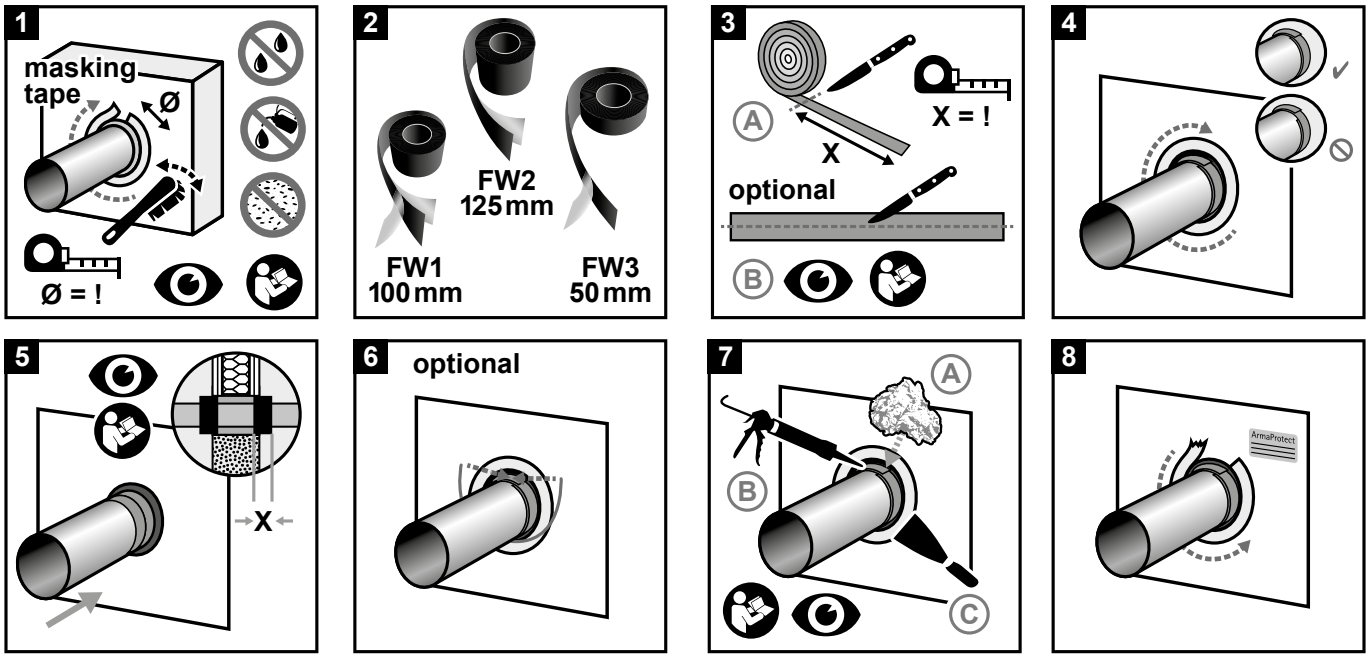

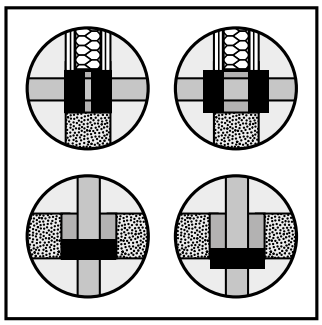

// Consumption guide

Check consumption of ArmaProtect Firestop Wrap FW2 based on the pipe diameter and number of layers required. The table below provides an estimation for one layer of wrap based on the outside diameter of the pipe, conduit or conduit bundle. To avoid wastage, review the number of layers required and the potential need of overlapping the firestop wrap according to third party published listings or national approvals / assessments before cutting.

Diameter of pipe / conduit / conduit bundle [mm]	Approximate length for one layer of firestop wrap [mm]
32	110
40	140
50	170
63	215
75	255
90	310
110	370
125	425
140	480
160	550

[1] See ETA 21/1025 for further installation details.

MAIN APPLICATIONS ACC. ETA-21/1026

In drywalls, solid walls and concrete floors[1]

Base material	Drywall, concrete wall, aerated concrete wall, masonry wall, shaft wall, concrete floor
Base material thickness	≥ 100 mm (wall) ≥ 150 mm (floor)
Seal thickness	≥ 100 mm (wall) ≥ 150 mm (floor)
Penetrants Non-combustible pipe with insulation • Steel pipes ≤ 323.9 mm • Copper pipes ≤ 108.0 mm	up to EI 120-C/U[1]

[1] See ETA 21/1026 for further installation details.

// Field of application and installation details[1]

Installation details

Base material thickness	
Flexible wall (drywall) or rigid wall (concrete, aerated concrete, masonry) or Rigid wall (concrete, aerated concrete)	⩾ 100mm ⩾ 150mm
Rigid floor (concrete, aerated concrete) (density 500 - 550 kg/m³)	⩾ 150mm

Intumescent wrap width	
Flexible wall	1 x 125mm ArmaProtect FW2 or 2 x ⩾ 62,5mm ArmaProtect FW2 (see tables)
Rigid wall	2 x 62,5mm ArmaProtect FW2 or 2 x ⩾ 125mm ArmaProtect FW2 (see tables)
Floor	1 x 125mm ArmaProtect FW2 or 2 x 125mm ArmaProtect FW2 (see tables)

Gap filler	Mineral construction material (class A1 or A2), eg. cement, mortar or gypsum ArmaProtect ABLC with loose mineral wool as back filling ArmaProtect EXPS with loose mineral wool as back filling

Additional insulation	With or without Rockwool "Klimarock" or FEF-Insulation (according to tables)

First support of the services both-sided of the separating element	
Wall	⩽ 775mm
Floor	⩽ 900mm

Distances	
Wall	⩾ 100mm between services, except for services marked with "zero distance"
Floor	⩽ 0mm

[1] Please see further installation detail in the ETA-21/1026

Applications

Application in flexible wall

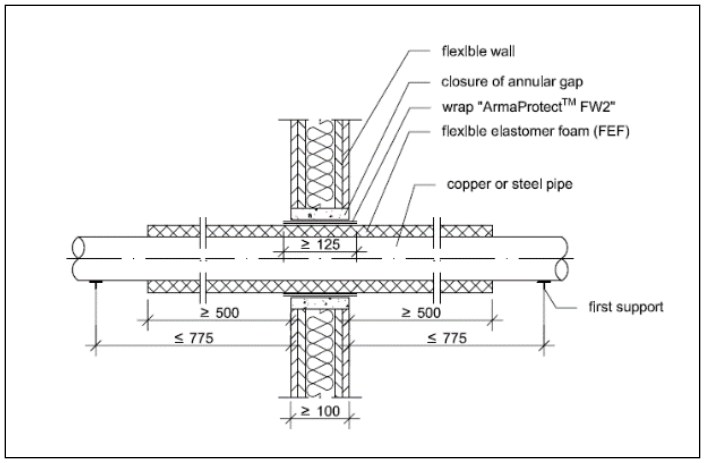

Legend

Dimensions in mm

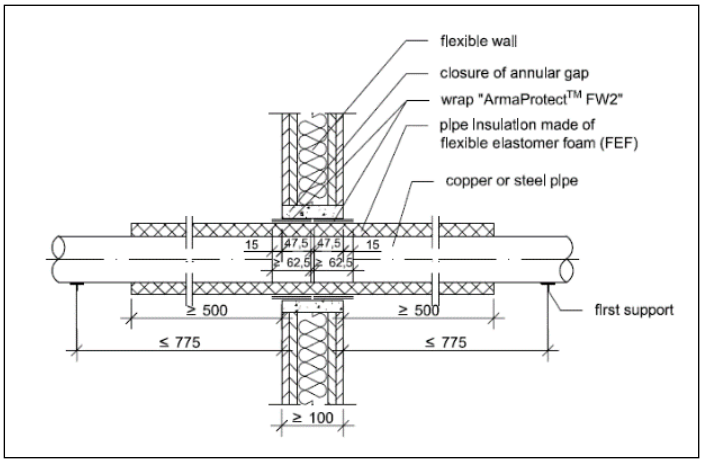

Legend

Dimensions in mm

Application in rigid wall

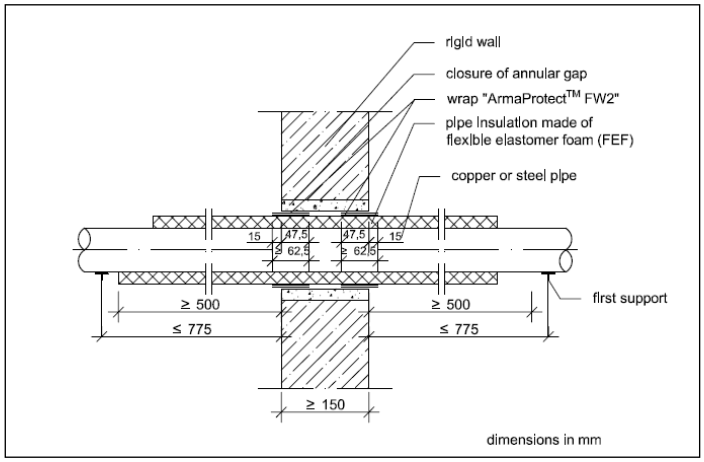

Legend

Dimensions in mm

Application in rigid floor

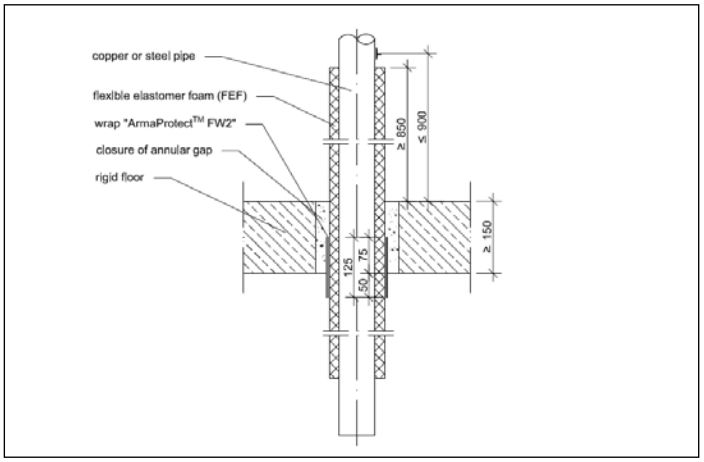

Legend

Dimensions in mm

Resistance to Fire

Wall application

Non-combustible pipes

Pipe ø (mm)	Pipe wall thickness (mm)	Insulation (mm)	No. of layers ArmaProtect FW2	Additional insulation (mm)	Base material	Base material thickness (mm)	Classification
Copper, steel, stainless steel, cast iron pipes with XG/ArmaFlex insulation with 1 x ≥ 125mm or 2 x ≥ 62,5mm ArmaProtect FW2 (placed on both sides)							
≤ 28	1 - 14,2	9	1	-	flexible wall & rigid wall	≥ 100	EI 90-C/U
		> 9 - ≤ 25	2				
> 28 - ≤ 42	1,2 - 14,2	13	1				
		> 13 - ≤ 25	2				
≤ 54	1,5 - 14,2	19 - ≤ 40					
≤ 88,9	2 - 14,2	> 19 - ≤ 40					
				≥ 30 x 500			EI 120-C/U
		50	3	≥ 19 x 500			
Copper, steel, stainless steel, cast iron pipes with XG/ArmaFlex insulation with 2 x 62,5mm ArmaProtect FW2 (placed on both sides)							
≤ 88,9	2,0 - 14,2	38	2	-	concrete or aerated concrete wall	≥ 150	EI 120-C/U
		19 - 38		≥ 19 x 500			EI 90-C/U
Steel, stainless steel, cast iron pipes with XG/ArmaFlex insulation with 1 x ≥ 125mm or 2 x ≥ 62,5mm ArmaProtect FW2 (placed on both sides)							
> 88,9 - ≤ 108	2 – 14,2	19	2	≥ 30 x 250	flexible wall & rigid wall	≥ 100	EI 90-C/U
		> 19 - ≤ 50					EI 60-C/U (E 90-C/U)
> 88,9 - ≤ 114,3	3,2 – 14,2	19		≥ 30 x 500			EI 90-C/U
		19 - 50	3				EI 120-C/U
> 108 - ≤ 168,3	4 – 14,2	25 - 50	2	≥ 30 x 250			EI 60-C/U (E 90-C/U)
> 168,3 - ≤ 219,1	4,5 – 14,2	25					
Steel, stainless steel, cast iron pipes with XG/ArmaFlex insulation with 2 x 62,5mm ArmaProtect FW2 (placed on both sides)							
≤ 114,3	3,2 - 14,2	19	2	-	concrete or aerated concrete wall	≥ 150	EI 60-C/U (E 120-C/U)
		19 – 38					
≤ 219,1	4,5 - 14,2	50	3	≥ 30 x 500			EI 90-C/U (E 120-C/U)
		25	2	≥ 60 x 500			EI 120-C/U
		50	3				EI 90-C/U (E 120-C/U)
≤ 323,9	5,6 - 14,2	25	2	≥ 60 x 750			EI 120-C/U
		50	3				

Pipe ø (mm)	Pipe wall thickness (mm)	Insulation (mm)	No. of layers ArmaProtect FW2	Additional insulation (mm)	Base material	Base material thickness (mm)	Classification
Copper, steel, stainless steel, cast iron pipes with SH/ArmaFlex insulation with 1 x ≥ 125mm or 2 x ≥ 62,5mm ArmaProtect FW2 (placed on both sides)							
≤ 54,0	1,5 - 14,2	20	2	-	flexible wall & rigid wall	≥ 100	EI 90-C/U
		> 20 - ≤ 40					EI 120-C/U
Copper, steel, stainless steel, cast iron pipes with AF/ArmaFlex insulation with 1 x ≥ 125mm or 2 x ≥ 62,5mm ArmaProtect FW2 (placed on both sides)							
≤ 54,0	1,5 - 14,2	17,0	2	-	flexible wall & rigid wall	≥ 100	EI 90-C/U
		> 17,0 - ≤ 38,0					EI 120-C/U
Steel, stainless steel, cast iron pipes with AF/ArmaFlex insulation with 2 x 62,5mm ArmaProtect FW2 (placed on both sides)							
≤ 168,3	4 – 14,2	25	2	-	concrete or aerated concrete wall	≥ 150	EI 60-C/U (E 120-C/U)
		50	3				
		25	2	≥ 30 x 500			
		50	3				
Copper, steel, stainless steel, cast iron pipes with NH/ArmaFlex insulation with 1 x ≥ 125mm or 2 x ≥ 62,5mm ArmaProtect FW2 (placed on both sides)							
≤ 54,0	1,5 - 14,2	19	2	-	flexible wall & rigid wall	≥ 100	EI 60-C/U (E 90-C/U)
		> 19 - ≤ 38					EI 90-C/U
		38					EI 120-C/U
Copper, Steel, stainless steel, cast iron pipes with NH/ArmaFlex insulation with 2 x 125mm ArmaProtect FW2 - (placed on both sides)							
≤ 28	1 - 14,2	9 – 25	2	-	concrete or aerated concrete wall	≥ 150	EI 120-C/U
≤ 42	1,2 - 14,2	10 – 44					
≤ 54	1,5 - 14,2	13 – 50					
≤ 88,9	2 - 14,2	19 – 38		≥ 30 x 500			
≤ 108		25 – 50		≥ 40 x 750			
Steel, stainless steel, cast iron pipes with NH/ArmaFlex insulation with 2 x 125mm ArmaProtect FW2 (placed on both sides)							
≤ 168,3	4 - 14,2	19 – 50	2	≥ 40 x 500	concrete or aerated concrete wall	≥ 150	EI 120-C/U
≤ 219,1	4,5 - 14,2	19		≥ 60 x 500			
Copper, steel, stainless steel, cast iron pipes with Kaiflex Kkplus s2 insulation with 1 x ≥ 125mm or 2 x ≥ 62,5mm ArmaProtect FW2 (placed on both sides)							
≤ 54,0	1,5 - 14,2	16,5	2	-	flexible wall & rigid wall	≥ 100	EI 60-C/U (E 90-C/U)
		> 16,5 - ≤ 35,5					EI 90-C/U
Copper, steel, stainless steel, cast iron pipes with Kaiflex Htplus insulation with 1 x ≥ 125mm or 2x ≥ 62,5mm ArmaProtect FW2 (placed on both sides)							
≤ 54,0	1,5 - 14,2	10 - 34	2	-	flexible wall & rigid wall	≥ 100	EI 90-C/U

Pipe ø (mm)	Pipe wall thickness (mm)	Insulation (mm)	No. of layers ArmaProtect FW2	Additional insulation (mm)	Base material	Base material thickness (mm)	Classification
Tubolit Duosplit copper pipes with 2 x ≥ 62,5mm ArmaProtect FW2 (placed on both sides) *							
10 / 18	-	9 (PEF)	2	-	concrete or aerated concrete wall	≥ 150	EI 120-C/U

* including 1 x PE-pipe Ø 25mm and 2 x cable Ø 14mm

Copper, steel, stainless steel, cast iron pipes with XG/ArmaFlex insulation with zero distance with 1 x ≥ 125mm or 2x ≥ 62,5mm ArmaProtect FW2 (placed on both sides)

≤ 42	1,2 - 14,2	13	1	-	flexible wall & rigid wall	≥ 100	EI 90-C/U
≤ 54		19	2	≥ 20 x 250			EI 60-C/U (E 90-C/U)
≤ 88,9	2 - 14,2						EI 90-C/U

Steel, stainless steel, cast iron pipes with XG/ArmaFlex insulation with zero distance with 1 x ≥ 125mm or 2x ≥ 62,5mm ArmaProtect FW2 (placed on both sides)

≤ 219,1	4,5 - 14,2	25	2	≥ 30 x 500	flexible wall & rigid wall	≥ 100	EI 60-C/U (E 90-C/U)

Tubolit Duosplit copper pipes with 1x ≥ 125mm or 2x ≥ 62,5mm ArmaProtect FW2 (placed on both sides)

6 / 10	-	9,0 (PEF)	1	≥ 30 x 500	flexible wall & rigid wall	≥ 100	EI 120-C/U

Floor application

Non-combustible pipes

Pipe ø (mm)	Pipe wall thickness (mm)	Insulation (mm)	No. of layers ArmaProtect FW2	Additional insulation (mm)	Base material	Base material thickness (mm)	Classification
Copper, steel, stainless steel, cast iron pipes with XG/ArmaFlex insulation with 1 x ≥ 125mm ArmaProtect FW2 (placed at the bottom)							
≤ 28	1 - 14,2	9	1	-	rigid floor	≥ 150	EI 120-C/U
		> 9 - ≤ 25	2				
> 28 - ≤ 42	1,2 - 14,2	13	1				
		> 13 - ≤ 25	2				
> 42 - ≤ 54	1,5 - 14,2	19 - 40					
> 54 - ≤ 88,9	2 - 14,2			≥ 30 x 500			
Copper, steel, stainless steel, cast iron pipes with AF/ArmaFlex insulation with 1 x ≥ 125mm ArmaProtect FW2 (placed at the bottom)							
≤ 54	1,5 - 14,2	19	2	Isover ML 3 + 0,6mm steel sheet casing	rigid floor	≥ 150	EI 120-C/U
				Rockwool Klimarock+ 0,6mm steel sheet casing			
≤ 88,9	2 - 14,2	14,5		-			
		19					
		41,5					EI 60-C/U
		18 - 41,5		≥ 30 x 500			EI 120-C/U

Non-combustible pipes (contd.)

Pipe ø (mm)	Pipe wall thickness (mm)	Insulation (mm)	No. of layers ArmaProtect FW2	Additional insulation (mm)	Base material	Base material thickness (mm)	Classification
Steel, stainless steel, cast iron pipes with AF/ArmaFlex insulation with 1 x ≥ 125mm ArmaProtect FW2 (placed at floor bottom)							
≤ 108	2 - 14,2	19	2	-	rigid floor	≥ 150	EI 120-C/U
		> 19 - ≤ 50	3				EI 60-C/U (E 120-C/U)
≤ 168,3	4 - 14,2	25	2				
		> 25 - ≤ 50	3				
≤ 219,1	4,5 - 14,2	> 19 - ≤ 25	2	≥ 60 x 500			EI 120-C/U
		> 25 - ≤ 50	3				EI 90-C/U
≤ 323,9	5,6 - 14,2	25	2	≥ 60 x 750			EI 120-C/U
		> 25 - ≤ 50	3				
Copper, steel, stainless steel, cast iron pipes with SH/ArmaFlex insulation with 1 x ≥ 125mm ArmaProtect FW2 (placed at floor bottom)							
> 88,9	2 – 14,2	20 - 40	2	≥ 30 x 500	rigid floor	≥ 150	EI 120-C/U
Steel, stainless steel, cast iron pipes with SH/ArmaFlex insulation with 1 x ≥ 125mm ArmaProtect FW2 (placed at floor bottom)							
≤ 219,1	4,5 – 14,2	20	2	≥ 60 x 500	rigid floor	≥ 150	EI 120-C/U
Copper, steel, stainless steel, cast iron pipes with NH/ArmaFlex insulation with 1 x ≥ 125mm ArmaProtect FW2 (placed at floor bottom)							
≤ 88,9	2 – 14,2	19 - 38	2	≥ 30 x 500	rigid floor	≥ 150	EI 120-C/U
Steel, stainless steel, cast iron pipes with NH/ArmaFlex insulation with 2 x ≥ 125mm ArmaProtect FW2 (placed at floor bottom)							
≤ 219,1	4,5 – 14,2	19	2	≥ 60 x 500	rigid floor	≥ 150	EI 120-C/U
Copper, steel, stainless steel, cast iron pipes with NH/ArmaFlex insulation with 2 x ≥ 125mm ArmaProtect FW2 (placed on both sides of the floor)							
≤ 28	1 - 14,2	9 – 25	2	-	rigid floor	≥ 150	EI 120-C/U
≤ 42	1,2 - 14,2	10 – 44					
≤ 54	1,5 - 14,2	13 – 50					
≤ 76	2 - 14,2	13					
		14 – 50					EI 90-C/U (E 120-C/U)
≤ 88,9		19 – 38		≥ 30 x 500			EI 120-C/U
≤ 108		25 – 50		≥ 40 x 750			
Steel, stainless steel, cast iron pipes with NH/ArmaFlex insulation with 1 x ≥ 125mm ArmaProtect FW2 (placed on both sides of the floor)							
≤ 168,3	4 – 14,2	19 – 50	2	≥ 40 x 500	rigid floor	≥ 150	EI 120-C/U
≤ 219,1	4,5 – 14,2	19		≥ 60 x 500			
Copper, steel, stainless steel, cast iron pipes with Kaiflex KK+ s2 insulation with 1 x ≥ 125mm ArmaProtect FW2 (placed at floor bottom)							
≤ 88,9	2 – 14,2	17,5 - 39	2	≥ 30 x 500	rigid floor	≥ 150	EI 120-C/U
Steel, stainless steel, cast iron pipes with Kaiflex KK+ s2 insulation with 2 x ≥ 125mm ArmaProtect FW2 (placed at floor bottom)							
≤ 219,1	4,5 – 14,2	19	2	≥ 60 x 500	rigid floor	≥ 150	EI 120-C/U

Non-combustible pipes (contd.)

Pipe ø (mm)	Pipe wall thickness (mm)	Insulation (mm)	No. of layers ArmaProtect FW2	Additional insulation (mm)	Base material	Base material thickness (mm)	Classification
Tubolit Duosplit copper pipes with 2 x ≥ 125mm ArmaProtect FW2 (placed on both sides of the floor)*							
6 / 10	-	9,0 (PEF)	1	≥ 30 x 500	rigid floor	≥ 150	EI 120-C/U
10 / 18			2	-			
* *including 1 x PE-pipe Ø 25mm and 2 x cable Ø 14mm							
Copper, steel, stainless steel, cast iron pipes with Isover ML 3 insulation with 2 x ≥ 125mm ArmaProtect FW2 (placed on both sides of the floor)							
≤ 54	1,5 – 14,2	50	2	0,6mm aluminium sheet casing	rigid floor	≥ 150	EI 120-C/U
≤ 88,9	2 – 14,2			-			
Steel, stainless steel, cast iron pipes with Isover ML 3 with 2 x ≥ 125mm ArmaProtect FW2 (placed on both sides of the floor)							
≤ 219,1	4,5 – 14,2	80	3	-	rigid floor	≥ 150	EI 120-C/U
		100	4				
Copper, steel, stainless steel, cast iron pipes with Isover U Protect insulation with 2 x ≥ 125mm ArmaProtect FW2 (placed on both sides of the floor)							
≤ 88,9	2 – 14,2	80	1	≥ 30 x 500	Okapak PVC foil	≥ 150	EI 120-C/U
Copper, steel, stainless steel, cast iron pipes with Armacell Armalok insulation with 2x ≥ 125mm ArmaProtect FW2 (placed on both sides of the floor)							
≤ 15	1 – 14,2	20	2	-	rigid floor	≥ 150	EI 120-C/U
≤ 35		30					
≤ 54	1,5 – 14,2	50	3				
Copper, steel, stainless steel, cast iron pipes with ArmaFlex Ultima insulation with 2 x ≥ 125mm ArmaProtect FW2 (placed on both sides of the floor)							
≤ 15	1 – 14,2	9 - 19	2	-	rigid floor	≥ 150	EI 120-C/U
≤ 54	1,5 – 14,2	13 - 32					
≤ 88,9	2 – 14,2	19					

TECHNICAL DATA - ARMAPROTECT FW2 FIRESTOP WRAP

Brief description	ArmaProtect FW2 is a fabric-based firestop wrap that helps to maintain the fire resistance performance of fire penetrations in walls and floors.
Material type	Glass filament fabric composite with insulation layer forming coating on the inside.
Product colour range	Grey on the outside, anthracite on the inside.
Special features	Flexible and tear-resistant.
Product range	Firestop wrap roll with dimensions of 10m x 125mm x 1.5mm in a cardbox box.
Applications	Firestop wrap for fire seals in walls and floors for non-combustible pipes with combustible insulation, multi-layer composite pipes, conduits and conduit bundles.
Installation	For professional use only. Refer to third party published listings, national approvals / assessments and Armacell's product literature for specific application details as well as before handling this product.
Declaration of Performance (DoP)	ArmaProtect FW2

Approvals and compliance

Specification compliance	• ETA-21/1026 acc. EN 1366-3	• UL 1479 (ASTM E814)

Property	Value/Assessment	Standard/Test method
Temperature range		
Operating temperature	-40°C to 70°C (-40°F to 158°F)	
Application temperature	5°C to 25°C (41°F to 77°F)	
Storage and transportation temperature	5°C to 25°C (41°F to 77°F)	
Mechanical properties		
Weight per unit area	2.0 g/m^2	
Fire performance		
Reaction to fire	Class B-s1,d0	EN 13501-1
Resistance to fire	See Annex	
Health and environment		
Emission of dangerous substances	No dangerous substances.	ETAG 026-02
Other technical features		
Durability and serviceability	Use category type X.	EOTA TR 024
Safety information	Please refer to the safety data sheet available on our website.	
Shelf life	No shelf life	
Storage	Store in a cool and dry place with an ambient temperature of 5 °C to 25 °C and protect from frost.	

ArmaProtect FW3

Firestop wrap

INSTRUCTIONS FOR USE

Ensure that surfaces are dry and free of dust and grease.

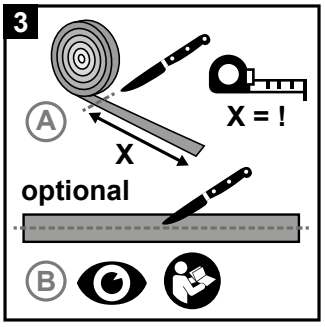

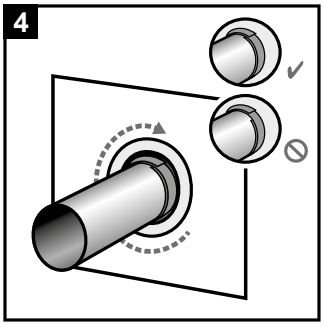

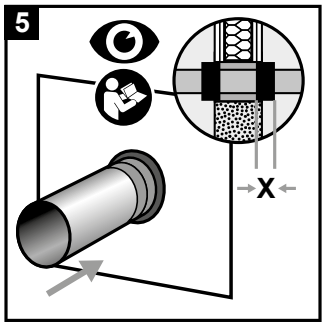

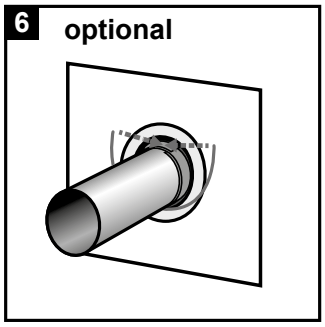

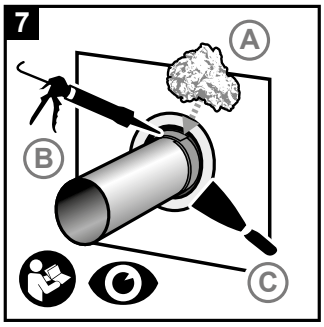

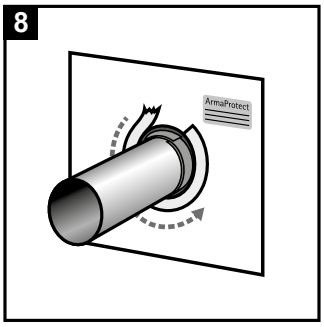

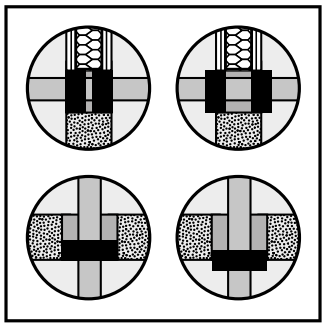

// Consumption guide

Check consumption of ArmaProtect Firestop Wrap FW3 based on the pipe diameter and number of layers required. Standard application for pipes:

- for wall penetration: installation of firestop wrap from both sides
- for floor penetration: installation of firestop wrap on the bottom side of the floor.

MAIN APPLICATIONS ACC. ETA-21/1099

In drywalls, solid walls and concrete floors[1]

Base material	Drywall, concrete wall, aerated concrete wall, masonry wall, shaft wall, concrete floor
Base material thickness	⩾ 100 mm (wall) ⩾ 40 mm (shaft wall) ⩾ 150 mm (floor)
Seal thickness	⩾ 100 mm (wall) ⩾ 80 mm (shaft wall) ⩾ 150 mm (floor)
Penetrants • Combustible pipes Ø ⩽ 160 mm (without combustible insulation)[1] • Combustible pipes Ø ⩽ 110 mm (with combustible insulation)[1] • Multi-layer composite pipes Ø ⩽ 110 mm[1]	up to EI 120-U/U[1]

[1] See ETA 21/1099 for further installation details.

// Field of application and installation details[1]

Installation details

Base material thickness	
Flexible wall (drywall) or rigid wall (concrete, aerated concrete, masonry)	≥ 100mm (for flexible wall: ≥ 94mm)
Shaft wall	≥ 2 x 20mm
Rigid floor (concrete, aerated concrete) (density ≥550 kg/m3)	≥ 150mm
Coated board application in wall	≥ 100mm (for flexible wall: ≥ 94mm) with 2 x ≥ 50mm mineral board (coated with ArmaProtect ABLC)
Coated board application in floor (density ≥650 kg/m3)	≥ 150mm with 2 x ≥ 50mm mineral board, eg. ArmaProtect CB Coated firestop board (coated with ArmaProtect ABLC)

Annular gap	10 – 50mm (for wall and floor)
Gap filler	Mineral construction material (class A1 or A2), eg. cement, mortar or gypsum

First support of the services both-sided of the separating element	
Wall	≤ 500mm
Floor	≤ 420mm
Shaft wall	≤ 300mm

[1] Please see further installation detail in the ETA-21/1099

Applications

Application of combustible pipe with sound insulation in flexible wall and rigid wall

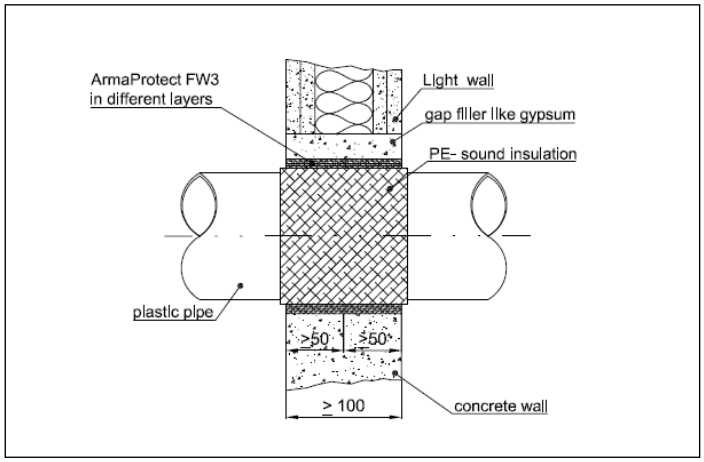

Legend

Dimensions in mm

Application of combustible pipe with combustible insulation in flexible wall and rigid wall

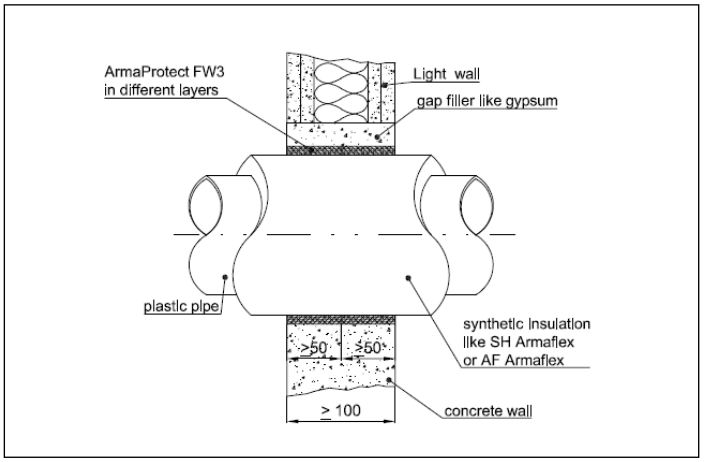

Legend

Dimensions in mm

Application of combustible pipe with sound insulation in rigid floor

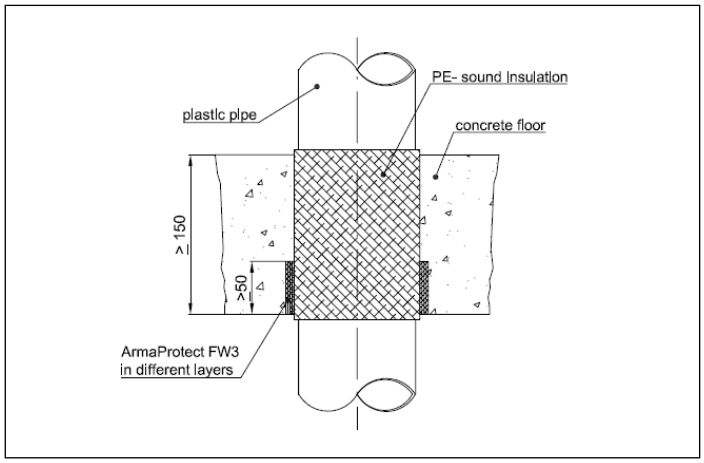

Legend

Dimensions in mm

Application of combustible pipe with combustible insulation in rigid floor

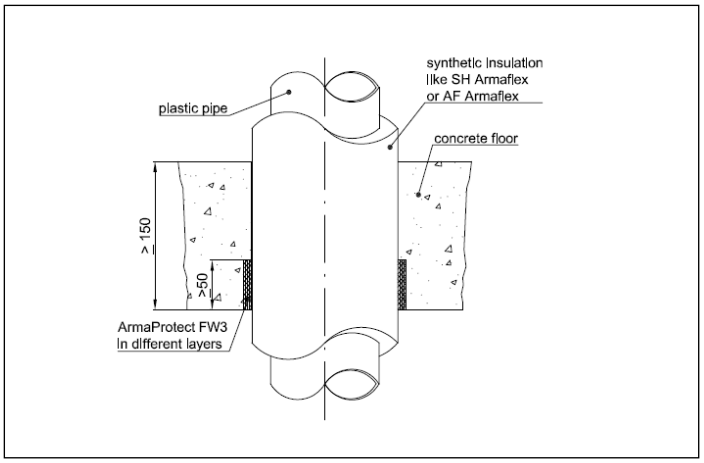

Legend

Dimensions in mm

Application of combustible pipe in coated board application in flexible wall and rigid wall

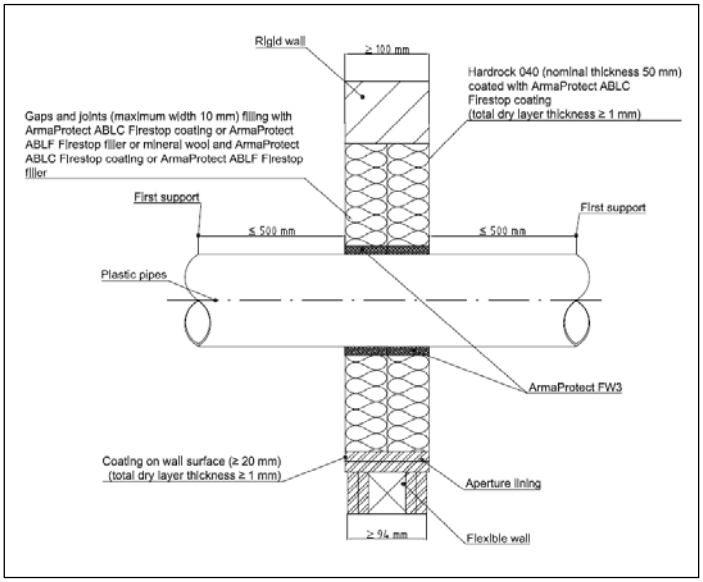

Application of combustible pipe in coated board application with sound insulation in rigid floor

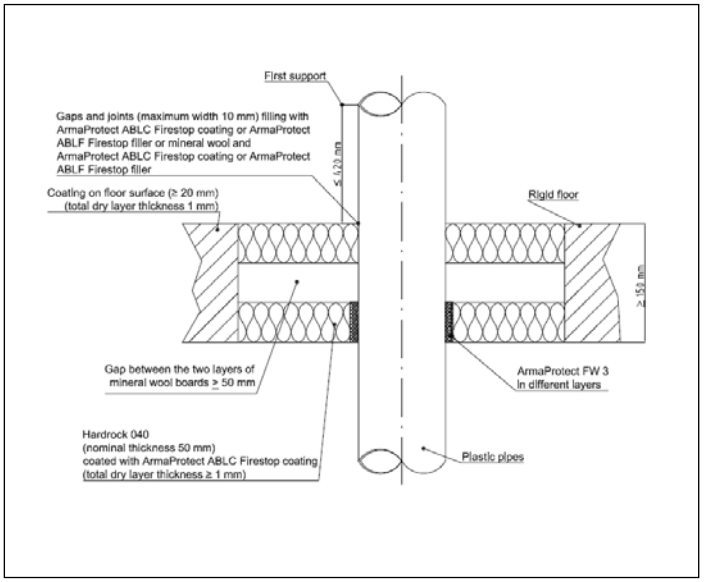

Application of combustible pipe in shaft wall application

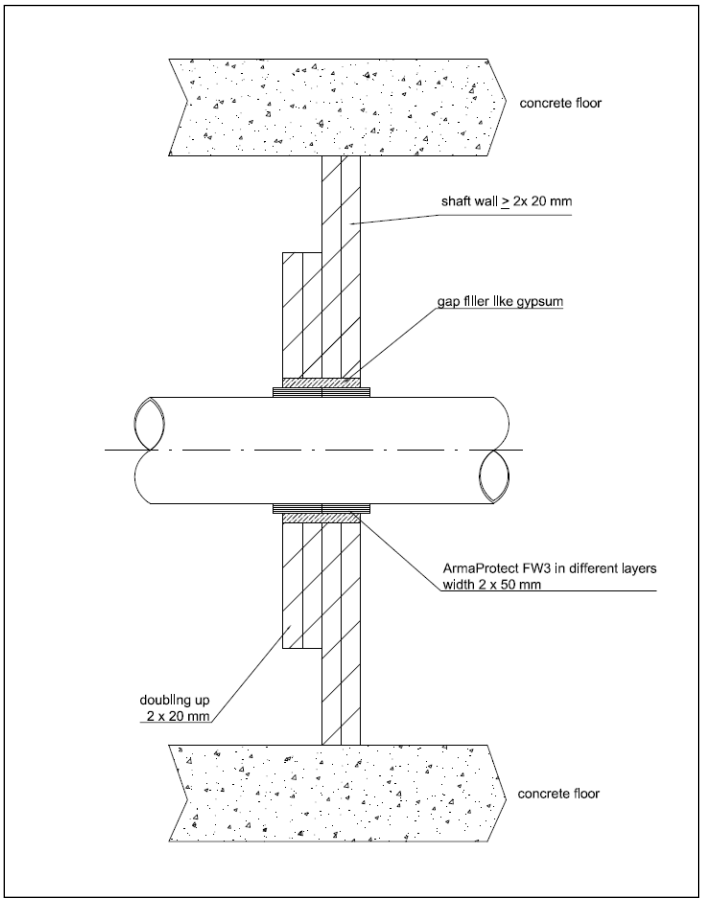

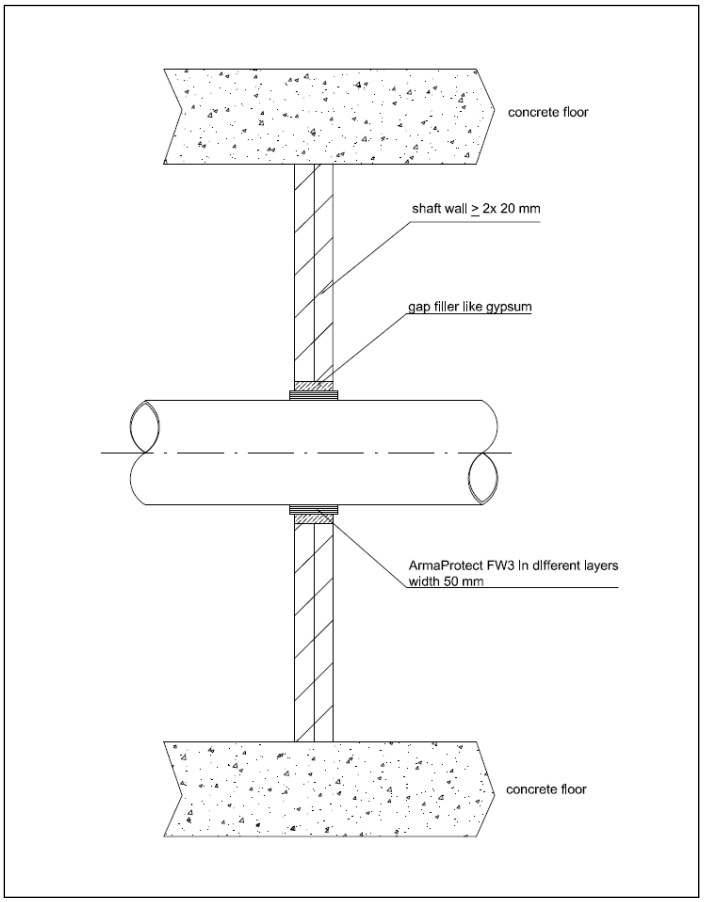

Resistance to Fire

Wall application

Pipe ø (mm)	Pipe wall thickness (mm)	Insulation (mm)	Number of layers ArmaProtect FW3	Base material	Base material thickness (mm)	Classification
PVC-U pipes according to EN 1452-1, EN 1453-1 and EN 1329-1 and PVC-C pipes according to EN 1566-1						
⩽ 50	1,8 – 5,6	-	2x2	flexible wall & rigid wall	flexible wall: ⩾ 94 rigid wall: ⩾ 100	EI 120-U/C
> 50 - ⩽ 110	1,8 – 12,3		2x3			
⩽ 50	1,8 – 5,6	4 (PE)				
> 50 - ⩽ 110	1,8 – 2,2		2x4			
	2,2 – 12,3		2x3			
⩽ 50	1,8 – 5,6	⩽ 9,5 (FEF, LS, ⩾ 350mm)				
> 50 - ⩽ 110	5,6 – 12,3					
⩽ 50	1,8 – 5,6	⩽ 31,5 (FEF, LS, ⩾ 350mm)				
> 50 - ⩽ 110	1,8 – 2,7	17 – 18mm (FEF, LS, ⩾ 350mm)				
	2,2 – 12,3	⩽ 31,5 (FEF, LS, ⩾ 350mm)	2x4			
PE-HD pipes according to EN 1519-1 and EN 12666-1, PE pipes according to EN 12201-2, EN 1519-1 and EN 12666-1, ABS pipes according to EN 1455-1 and SAN+PVC pipes according to EN 1565-1						
⩽ 50	1,8	-	2x2	flexible wall & rigid wall	flexible wall: ⩾ 94 rigid wall: ⩾ 100	EI 120-U/C
> 50 - ⩽ 110	1,8 – 10		2x3			
⩽ 50	1,8	4 (PE)				
> 50 - ⩽ 110	1,8 – 10					
⩽ 50	1,8	⩽ 9,5 (FEF, LS, ⩾ 350mm)				
> 50 - ⩽ 110	1,8 – 10					
⩽ 110		⩽ 31,5 (FEF, LS, ⩾ 350mm)	2x4			
PP pipes according to EN ISO 15494						
⩽ 50	1,8	-	2x2	flexible wall & rigid wall	flexible wall: ⩾ 94 rigid wall: ⩾ 100	EI 120-U/C
> 50 - ⩽ 110	1,8 – 10		2x3			
⩽ 50	1,8	4 (PE)	2x2			
> 50 - ⩽ 110	1,8 – 10		2x3			
⩽ 50	1,8	⩽ 9,5 (FEF, LS, ⩾ 350mm)				
> 50 - ⩽ 110	1,8 – 10					
⩽ 110		⩽ 31,5 (FEF, LS, ⩾ 350mm)	2x4			

Pipe ø (mm)	Pipe wall thickness (mm)	Insulation (mm)	Number of layers ArmaProtect FW3	Base material	Base material thickness (mm)	Classification
alpex Duo multi-layer pipes						
⩽ 40	3,5	without insulation, 4,0 (PE) or ⩽ 31,5 (FEF, LS, ⩾ 350mm)	2x2	flexible wall & rigid wall	flexible wall: ⩾ 94 rigid wall: ⩾ 100	EI 120-U/C
> 40 - ⩽ 75	3,5 – 5	-	2x3			
		⩽ 9,5 (FEF, LS, ⩾ 350mm)				EI 90-U/C (E 120-U/C)
		12,5 – 18 (FEF, LS, ⩾ 350mm)	2x4			
		25 – 31,5 (FEF, LS, ⩾ 350mm)				EI 120-U/C
		⩽ 31,5 (FEF, LS, ⩾ 350mm)	2x5			
aquatherm green pipe MS pipes						
⩽ 40	5,6	without insulation, 4,0 (PE) or ⩽ 31,5 (FEF, LS, ⩾ 350mm)	2x2	flexible wall & rigid wall	flexible wall: ⩾ 94 rigid wall: ⩾ 100	EI 120-U/C
> 40 - ⩽ 75	5,6 - 10,4		2x3			
> 40 - ⩽ 110	10,4 - 15,2		2x4			
Uponor MLC pipe white pipes (old name: Unipipe multi-layer pipe)						
⩽ 40	5,6	without insulation, 4,0 (PE) or ⩽ 31,5 (FEF, LS, ⩾ 350mm)	2x2	flexible wall & rigid wall	flexible wall: ⩾ 94 rigid wall: ⩾ 100	EI 120-U/C
> 40 - ⩽ 75	5,6 – 10,4	-	2x3			EI 90-U/C (E 120-U/C)
			2x4			
		4 (PE)	2x3			EI 120-U/C
		⩽ 31,5 (FEF, LS, ⩾ 350mm)				
> 40 - ⩽ 110	10,4 - 15,2	-	2x4			EI 90-U/C (E 120-U/C)
			2x5			
		4 (PE)	2x4			EI 120-U/C
		⩽ 31,5 (FEF, LS, ⩾ 350mm)				
		-		rigid wall	⩾ 120	
Wavin SiTECH pipes with sound insulation						
⩽ 50	2	4 (PE)	2x2	flexible wall & rigid wall	flexible wall: ⩾ 94 rigid wall: ⩾ 100	EI 120-U/C
> 50 - ⩽ 75	2 - 2,55		2x3			
> 50 - ⩽ 90	2 - 3,05		2x4			
> 50 - ⩽ 110	2 - 3,7		2x5			

Shaft wall application

Pipe ø (mm)	Pipe wall thickness (mm)	Insulation (mm)	Number of layers ArmaProtect FW3	Base material	Base material thickness (mm)	Classification
PVC-U pipes according to EN ISO 1452-1 and EN ISO 15493						
50	3,7	-	2	shaft wall	2 x ≥ 20	EI 90-U/U
110	5,3		4			EI 90-U/C
					2 x ≥ 20 + frame of 2 x ≥ 20	EI 120-U/C
PE pipes according to EN 1519-1 or EN ISO 15494						
50	4,6	-	2	shaft wall	2 x ≥ 20	EI 90-U/U
110	6,3		4			EI 90-U/C
					2 x ≥ 20 + frame of 2 x ≥ 20	EI 120-U/C
PP pipes according to EN ISO 15494						
50	4,6	-	2	shaft wall	2 x ≥ 20	EI 90-U/U
110	6,3		4			EI 90-U/C
					2 x ≥ 20 + frame of 2 x ≥ 20	EI 120-U/C

Floor application

Pipe ø (mm)	Pipe wall thickness (mm)	Insulation (mm)	Number of layers ArmaProtect FW3	Base material	Base material thickness (mm)	Classification
PVC-U pipes according to EN 1452-1						
⩽ 50	1,8 – 5,6	-	2	rigid floor	⩾ 150	EI 120-U/C
> 50 - ⩽ 110	1,8 – 12,3		3			
50	3,7		2			EI 240-U/C
⩽ 110	1,8 – 12,3	4 (PE)	3			EI 120-U/C
		⩽ 9,5 (FEF, LS, ⩾ 350mm)				EI 90-U/C
	12,3	⩽ 18 (FEF, LS, ⩾ 350mm)				
	1,8 – 12,3	⩽ 23 (FEF, LS, ⩾ 350mm)	4			
110	12,3	15,5 – 23 (FEF, LS, ⩾ 350mm)				EI 120-U/C
⩽ 110	1,8 – 12,3	12,5 – 31,5 (FEF, LS, ⩾ 350mm)	5			EI 90-U/C
	12,3					EI 120-C/U
⩽ 160	4,7	-	6			EI 240-C/U
PE-HD pipes according to EN 1519-1						
⩽ 50	1,8	-	2	rigid floor	⩾ 150	EI 120-U/C
> 50 - ⩽ 110	1,8 – 10		3			
⩽ 50	1,8	4 (PE)				
> 50 - ⩽ 110	1,8 – 10					
⩽ 50	1,8	⩽ 9,5 (FEF, LS, ⩾ 350mm)				
> 50 - ⩽ 75	1,8 – 1,9					
50	4,6	-	2			EI 240-U/C
> 75 - ⩽ 110	1,9 – 10	⩽ 9,5 (FEF, LS, ⩾ 350mm)	3			EI 90-U/C
110	10		4			EI 90-U/C (E 120-U/C)
		9,5 – 18 (FEF, LS, ⩾ 350mm)	3			EI 120-U/C
⩽ 110	1,8 – 10	9,5 – 31,5 (FEF, LS, ⩾ 350mm)	4			
110	6,3	-				EI 240-U/C
PP pipes according to EN ISO 15494						
⩽ 50	1,8	-	2	rigid floor	⩾ 150	EI 120-U/C
> 50 - ⩽ 110	1,8 – 10		3			
⩽ 50	1,8	4 (PE)	2			
> 50 - ⩽ 110	1,8 – 10		3			
⩽ 110		⩽ 9,5 (FEF, LS, ⩾ 350mm)				
		⩽ 31,5 (FEF, LS, ⩾ 350mm)	4			

Pipe ø (mm)	Pipe wall thickness (mm)	Insulation (mm)	Number of layers ArmaProtect FW3	Base material	Base material thickness (mm)	Classification
alpex Duo multi-layer pipes						
⩽ 40	3,5	-	2	rigid floor	⩾ 150	EI 120-U/C
> 40 - ⩽ 75	3,5 – 5		3			
		4 (PE)	5			EI 90-U/C (E 120-U/C)
		⩽ 9,5 (FEF, LS, ⩾350mm)	3			EI 120-U/C
		⩽ 31,5 (FEF, LS, ⩾ 350mm)	4			
aquatherm green pipe MS pipes						
⩽ 40	5,6	without, 4,0 (PE) or ⩽ 9,5 (FEF, LS, ⩾ 350mm)	2	rigid floor	⩾ 150	EI 120-U/C
> 40 - ⩽ 75	5,6 - 10,4		3			
> 40 - ⩽ 110	10,4 - 15,2		4			
Geberit Silent PP pipes with sound insulation						
⩽ 50	2	4 (PE)	2	rigid floor	⩾ 150	EI 120-U/C
> 50 - ⩽ 75	2 - 2,5		3			
> 50 - ⩽ 90	2 - 3,1		4			
> 50 - ⩽ 110	2 - 3,6		5			
POLO-KAL NG pipes with sound insulation						
⩽ 50	2	4 (PE)	2	rigid floor	⩾ 150	EI 120-U/C
> 50 - ⩽ 75	2 - 2,5		3			
> 50 - ⩽ 90	2 - 2,9		4			
> 50 - ⩽ 110	2 - 3,4		5			
Rehau Raupiano pipes with sound insulation						
⩽ 50	1,8	4 (PE)	2	rigid floor	⩾ 150	EI 120-U/C
> 50 - ⩽ 75	1,8 - 2,1		3			
> 50 - ⩽ 90	1,8 - 2,4		4			
> 50 - ⩽ 110	1,8 - 2,7		5			
Uponor MLC pipe white (old name: Unipipe multi-layer pipe)						
⩽ 40	5,6	4 (PE)	2	rigid floor	⩾ 150	EI 120-U/C
> 40 - ⩽ 75	5,6 – 10,4		3			
> 40 - ⩽ 110	10,4 – 15,2		4			

Pipe ø (mm)	Pipe wall thickness (mm)	Insulation (mm)	Number of layers ArmaProtect FW3	Base material	Base material thickness (mm)	Classification
Wavin SiTECH pipes with sound insulation						
⩽ 50	2	4 (PE)	2	rigid floor	⩾ 150	EI 120-U/C
> 50 - ⩽ 75	2 - 2,55		3			
> 50 - ⩽ 90	2 - 3,05		4			
> 50 - ⩽ 110	2 - 3,7		5			
PVC pipes and multi-layer pipes like Unipipe, alpex Duo, Uponor MLC pipe white and aquatherm green pipe MS with zero relative distance						
⩽ 110	1,8 - 12,3	without, 4,0 (PE) or ⩽ 9,5 (FEF, LS, ⩾ 350mm)	2	rigid floor	⩾ 150	EI 90-U/C
		9,5 – 31,5 (FEF, LS, ⩾ 350mm)	3			

Coated board application in wall

Pipe ø (mm)	Pipe wall thickness (mm)	Insulation (mm)	Number of layers ArmaProtect FW3	Base material	Base material thickness (mm)	Classification
PVC-U pipes according to EN ISO 1452-1 and EN ISO 15493						
50	2,4	-	2	Coated board in flexible wall or rigid wall	flexible wall: ≥ 94 rigid wall: ≥ 100 Coated board: 2 x ≥ 50	EI 120-U/U
75	3,6		3			
110	5,3		4			
PP pipes according to EN ISO 15494						
50	2,9	-	2	Coated board in flexible wall or rigid wall	flexible wall: ≥ 94 rigid wall: ≥ 100 Coated board: 2 x ≥ 50	EI 120-U/U
75	4,3		3			
110	9,1		6			

Coated board application in floor

Pipe ø (mm)	Pipe wall thickness (mm)	Insulation (mm)	Number of layers ArmaProtect FW3	Base material	Base material thickness (mm)	Classification
PVC-U pipes according to EN ISO 1452-1 and EN ISO 15493						
50	2,4	-	2	Coated board in floor	floor: ≥ 150 Coated board: 2 x ≥ 50	EI 60-U/U (E 120-U/U)
75	3,6		3			EI 120-U/U
110	5,3		4			EI 90-U/U (E 120-U/U)
160	7,7		6			
PP pipes according to EN ISO 15494						
50	2,9	-	2	Coated board in floor	floor: ≥ 150 Coated board: 2 x ≥ 50	EI 60-U/U (E 120-U/U)
75	4,3		3			EI 120-U/U
110	6,3		4			EI 90-U/U (E 120-U/U)
160	9,1		6			EI 120-U/U

TECHNICAL DATA - ARMAPROTECT FW3 FIRESTOP WRAP

Brief description	ArmaProtect FW3 is a flexible firestop wrap.
Material type	Halogen-free intumescent material based on blowing graphite technology.
Product colour range	Dark red.
Special features	Easy visual inspection, self-adhesive strip.
Product range	Firestop wrap roll with self-adhesive strip and dimensions of 12.5m x 50mm x 2mm.
Applications	Firestop wrap for fire seals in walls and floors for combustible pipes (with and without insulation) and multi-layer composite pipes.
Installation	For professional use only. Refer to third party published listings, national approvals / assessments and Armacell's product literature for specific application details as well as before handling this product.
Declaration of Performance (DoP)	ArmaProtect FW3

Approvals and compliance	
Specification compliance	• ETA-21/1099 acc. EN 1366-3

Property	Value/Assessment	Standard/Test method
Temperature range		
Operating temperature	-40°C to 70°C (-40°F to 158°F)	
Application temperature	5°C to 25°C (41°F to 77°F)	
Storage and transportation temperature	5°C to 25°C (41°F to 77°F)	
Mechanical properties		
Density	1.2 g/cm^3 ± 10%	
Expansion ratio	18 to 38 fold	
Fire performance		
Reaction to fire	Class E	EN 13501-1
Resistance to fire	See Annex	
Health and environment		
Emission of dangerous substances	No dangerous substances.	ETA 21/1099
Other technical features		
Durability and serviceability	Use category type X.	EOTA TR 024
Safety information	Please refer to the safety data sheet available on our website.	
Shelf life	No shelf life	
Storage	Store in a cool and dry place with an ambient temperature of 5 °C to 25 °C and protect from frost.	

ArmaProtect FC1
Firestop collar

INSTRUCTIONS FOR USE

Ensure that surfaces are dry and free of dust and grease.

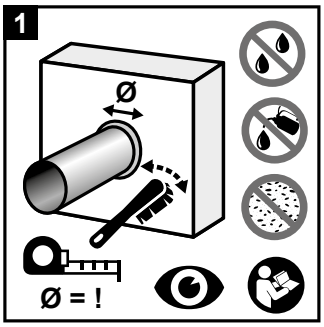

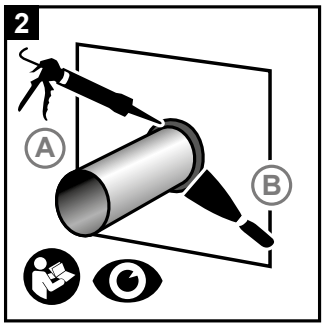

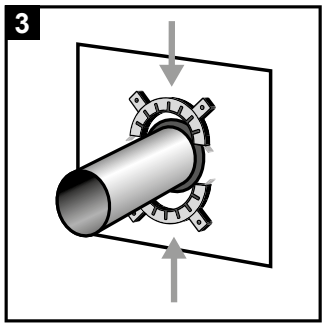

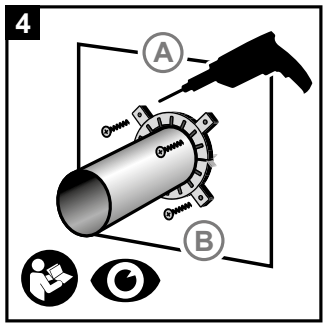

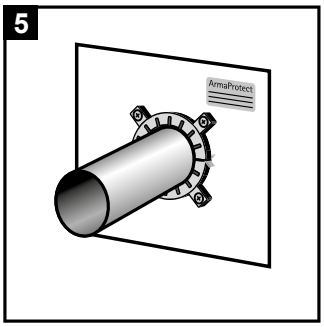

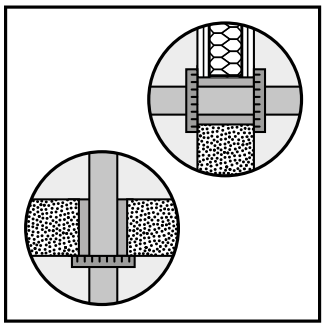

// Consumption guide

Choose ArmaProtect FC1 Firestop collar based on the pipe diameter.
Standard pipe application:

- 2 firestop collars for wall penetration (installation of firestop collar from both sides)
- 1 firestop collars for floor penetration (installation of firestop collar on the bottom side of the floor)

Collar size (Ø) [mm]	D2 (Internal Ø) [mm]	D1 (External Ø) [mm]	H1 (Installation height) [mm]	Number of hooks
50	52	61.2	42.5	2
63	65	78.2	42.5	3
75	77	90.2	42.5	3
90	92	109.2	42.5	3
110	112	129.2	42.5	3
125	127	148.2	42.5	4
140	142	167.2	42.5	4
160	162	187.2	42.5	4

MAIN APPLICATIONS ACC. ETA-21/1024

In drywalls and solid walls[1]

Base material	Drywall, concrete wall, aerated concrete wall, masonry wall
Base material thickness	≥ 100 mm
Maximum pipe diameter	up to 160 mm pipe diameter
Penetrants • Combustible pipe without insulation (≤ 160 mm)[1]	up to EI 120-U/C[1]

[1] See ETA 21/1024 for further installation details.

Concrete floors[1]

Base material	Concrete floors
Base material thickness	≥ 150 mm (wall)
Maximum pipe diameter	up to 160 mm pipe diameter
Penetrants • Combustible pipe without insulation (≤ 160 mm)[1]	up to EI 240-U/C[1]

[1] See ETA 21/1024 for further installation details.

// Field of application and installation details[1]

Installation details

Base material thickness	
Flexible wall (drywall) or rigid wall (concrete, aerated concrete, masonry)	≥ 100mm (for flexible wall: ≥ 94mm)
Rigid floor (concrete, aerated concrete) (density ≥550 kg/m³)	≥ 150mm

Annular gap	Wall: 10 – 30mm Floor: 10 – 50mm
Gap filler	Mineral construction material (class A1 or A2), eg. cement, mortar or gypsum
Fixing of firestop collar	Steel dowels / steel screw anchors / steel flexible wall anchors with steel screws and washers

First support of the services both-sided of the separating element	≤ 650mm

Distances	≥ 100mm between two single penetration seals of insulated (from the insulation) / non-insulated (from the pipe wall) pipes

[1] Please see further installation detail in the ETA-21/1024

Applications

Application in flexible wall and rigid wall

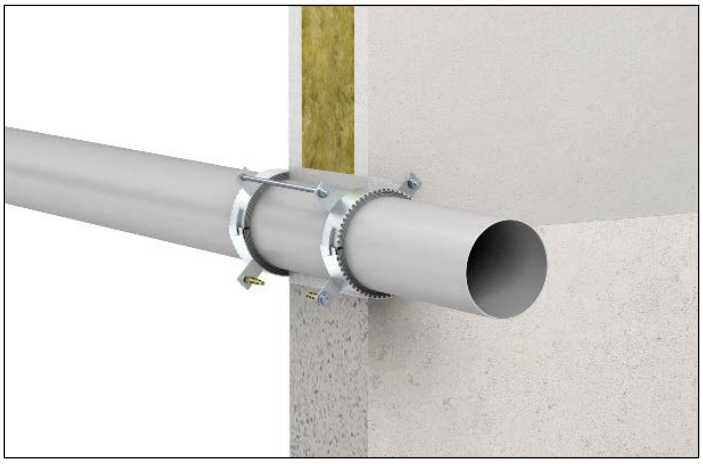

Application in rigid floor

Penetration of pipes, wall installation

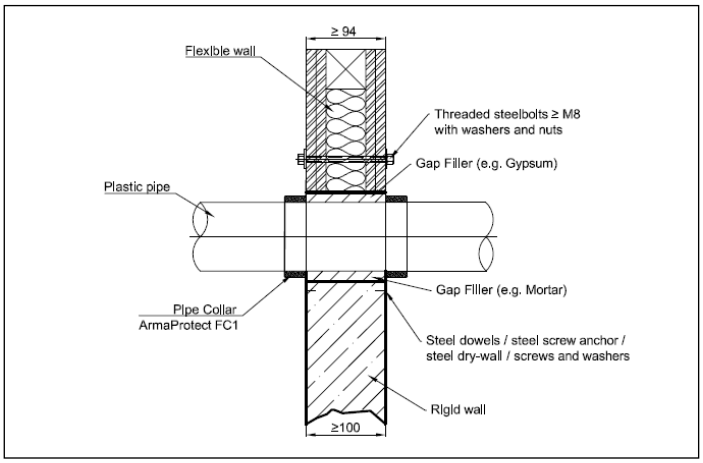

Legend

Dimensions in mm

Penetration of pipes, floor installation

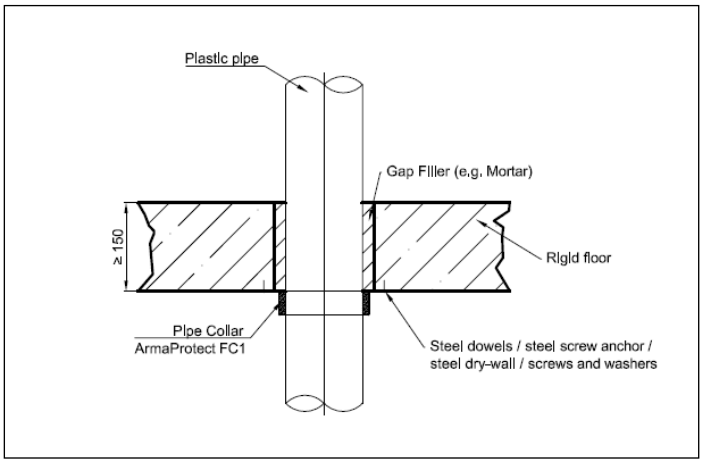

Legend

Dimensions in mm

Resistance to Fire

Wall applications

Pipe Ø (mm)	Pipe wall thickness (mm)	Base material	Base material thickness (mm)	Classification
PVC-U pipes (without insulation)				
⩽ 50	1,8 - 5,6	flexible wall & rigid wall	flexible wall: ⩾ 94 rigid wall: ⩾ 100	EI 120-U/C
> 50 - ⩽ 75	1,8 - 8,4			
> 75 - ⩽ 110	1,8 - 12,3			
> 110 - ⩽ 125	2,2 - 12,2			
⩽ 160	3,2 - 11,9			
PE pipes (without insulation)				
⩽ 50	1,8 - 4,6	flexible wall & rigid wall	flexible wall: ⩾ 94 rigid wall: ⩾ 100	EI 120-U/C
> 50 - ⩽ 75	1,8 - 8,4			
> 75 - ⩽ 110	2,7-10			
PP pipes (without insulation)				
⩽ 50	1,8 - 4,6	flexible wall & rigid wall	flexible wall: ⩾ 94 rigid wall: ⩾ 100	EI 120-U/C
> 50 - ⩽ 75	1,8 - 8,4			
> 75 - ⩽ 110	2,7 - 10			
⩽ 125	3,9 - 12,2			EI 90-U/C
⩽ 160	> 4 - 14,6			
aquatherm green pipe MS pipes (without insulation)				
⩽ 16	2,2	flexible wall & rigid wall	flexible wall: ⩾ 94 rigid wall: ⩾ 100	EI 120-C/U
⩽ 50	6,9			
⩽ 75	10,4			
⩽ 110	15,2			

Also covered pipe diameter (mm) / wall thickness (mm): 20 - 2,8 / 25-3,5 / 32 - 4,5 / 40 - 5,6 / 63 - 8,7 / 90 - 12,5

Pipe Ø (mm)	Pipe wall thickness (mm)	Base material	Base material thickness (mm)	Classification
Blue power pipes (without insulation)				
≤ 50	1,8	flexible wall & rigid wall	flexible wall: ≥ 94 rigid wall: ≥ 100	EI 120-U/C
≤ 75	2,5			
≤ 110	3,4			
Geberit Silent PP pipes (without insulation)				
≤ 50	2	flexible wall & rigid wall	flexible wall: ≥ 94 rigid wall: ≥ 100	EI 120-U/C
≤ 75	2,6			EI 90-U/C (E 120-U/C)
≤ 110	3,6			
POLO-KAL NG pipes (without insulation)				
≤ 50	2	flexible wall & rigid wall	flexible wall: ≥ 94 rigid wall: ≥ 100	EI 120-U/C
≤ 75	2,6			EI 90-U/C (E 120-U/C)
≤ 110	3,4			
≤ 125	3,9			EI 120-U/C
≤ 160	4,9			
Rehau Raupiano Plus pipes (without insulation)				
≤ 50	1,8	flexible wall & rigid wall	flexible wall: ≥ 94 rigid wall: ≥ 100	EI 120-U/C
≤ 75	1,9			
≤ 110	2,7			
≤ 125	3,1			
≤ 160	3,6			
Triplus 3 Schicht-Schallschutzrohr pipes (without insulation)				
≤ 40	1,8	flexible wall & rigid wall	flexible wall: ≥ 94 rigid wall: ≥ 100	EI 120-U/C
≤ 75	2,5			
≤ 90	3,1			
Wavin SITECH pipes (without insulation)				
≤ 50	2	flexible wall & rigid wall	flexible wall: ≥ 94 rigid wall: ≥ 100	EI 120-U/C
≤ 75	2,6			EI 90-U/C (E 120-U/C)
≤ 110	3,6			

Floor Applications

Pipe Ø (mm)	Pipe wall thickness (mm)	Base material	Base material thickness (mm)	Classification
PVC-U pipes (without insulation)				
⩽ 50	1,8 - 5,6	rigid floor	⩾ 150	EI 240-U/C
> 50 - ⩽ 75	1,8 - 8,4			
> 75 - ⩽ 110	1,8 - 12,3			
> 110 - ⩽ 125	2,2 - 12,1			EI 120-U/C
⩽ 125	12,1			EI 240-U/C
⩽ 160	3,2 - 11,9			EI 120-U/C
	11,9			EI 240-U/C
PE pipes (without insulation)				
⩽ 50	1,8 - 4,6	rigid floor	⩾ 150	EI 240-U/C
> 50 - ⩽ 75	1,8 - 8,4			
> 75 - ⩽ 110	2,7			
	> 2,7-10			EI 180-U/C (E 240-U/C)
⩽ 125	3,1			EI 240-U/C
	> 3,1-11,4			EI 120-U/C (E 240-U/C)
⩽ 160	4			EI 240-U/C
	> 4 - 14,6			EI 120-U/C (E 240-U/C)
PP pipes (without insulation)				
⩽ 50	1,8 - 4,6	rigid floor	⩾ 150	EI 240-U/C
> 50 - ⩽ 75	1,8 - 8,4			
> 75 - ⩽ 110	2,7			
	> 2,7 - 10			EI 180-U/C (E 240-U/C)
aquatherm green pipe MS pipes (without insulation)				
⩽ 16	2,2	rigid floor	⩾ 150	EI 120-U/C
⩽ 50	6,9			
⩽ 75	10,4			
⩽ 110	15,2			

Also covered pipe diameter (mm) / wall thickness (mm): 20 - 2,8 / 25-3,5 / 32 - 4,5 / 40 - 5,6 / 63 - 8,7 / 90 - 12,5

Pipe Ø (mm)	Pipe wall thickness (mm)	Base material	Base material thickness (mm)	Classification
Geberit Silent PP pipes (without insulation)				
⩽ 50	2	rigid floor	⩾ 150	EI 120-U/C
⩽ 75	2,6			
⩽ 110	3,6			
POLO-KAL NG pipes (without insulation)				
⩽ 50	2	rigid floor	⩾ 150	EI 90-U/C (E 120-U/C)
⩽ 75	3			
⩽ 110	4			EI 120-U/C
Uponor MLC Rohr "weiß" pipes (without insulation)				
⩽ 50	4,5	rigid floor	⩾ 150	EI 120-U/C
⩽ 75	7,5			EI 90-U/C
⩽ 110	10			
Also covered pipe diameter (mm) / wall thicknesses (mm): (14-18) x 2 / 20 x 2,25 / 25 x 2,5 / 32 x 3 / 40 x 4 / 63 x 6 / 90 x 8,5				
Wavin SITECH pipes (without insulation)				
⩽ 50	2	rigid floor	⩾ 150	EI 120-U/C
⩽ 75	2,6			
⩽ 110	3,6			
⩽ 125	4,2			EI 60-U/C
⩽ 160	5,3			

TECHNICAL DATA - ARMAPROTECT FC1 FIRESTOP COLLAR

Brief description	ArmaProtect FC1 is a solid metal sleeve equipped with several layers of intumescent material to maintain the fire resistance performance of fire penetrations in walls and floors.
Material type	Galvanized sheet steel housing with flexible intumescent strip.
Product colour range	Housing is silver grey and inlay is anthracite.
Special features	Easy visual inspection.
Product range	50mm to 160mm diameter.
Applications	Firestop collar for sealing combustible pipes without insulation.
Installation	For professional use only. Refer to third party published listings, national approvals / assessments and Armacell's product literature for specific application details as well as before handling this product.
Declaration of Performance (DoP)	ArmaProtect FC1

Approvals and compliance	
Specification compliance	• ETA 21 /1024 acc. EN 1366-3

Property	Value/Assessment	Standard/Test method
Temperature range		
Operating temperature	-40°C to 70°C (40°F to 158°F)	
Application temperature	5°C to 25°C (41°F to 77°F)	
Storage and transportation temperature	5°C to 25°C (41°F to 77°F)	
Mechanical properties		
Weight loss on heating	Inlay: 52 - 62% (at 550°C, 30 minutes)	EN 13501-1
Density	Inlay: 1.02 -1.42 g/cm^3 (thickness 2 mm)	ETA 21/1024
Expansion ratio	Inlay: 12 - 22.5 times	ETA 21/1024
Expansion pressure	Inlay: > 0.6 N/mm^2	ETA 21/1024
Fire performance		
Reaction to fire	Housing: Class A1 Inlay: Class E	EN 13501-1
Resistance to fire	See Annex	
Health and environment		
Emission of dangerous substances	No dangerous substances.	ETAG 026-02
Other technical features		
Durability and serviceability	Use category type Y_1	EOTA TR 024
Safety information	Please refer to the safety data sheet available on our website.	
Storage	Store in a cool and dry place with an ambient temperature of 5 °C to 25 °C and protect from frost.	

ArmaProtect FC2

Firestop collar

INSTRUCTIONS FOR USE

Ensure that surfaces are dry and free of dust and grease.

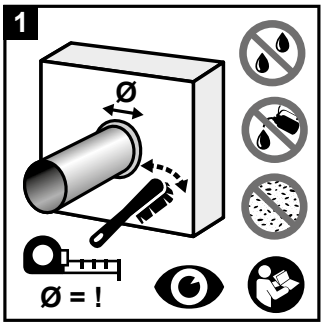

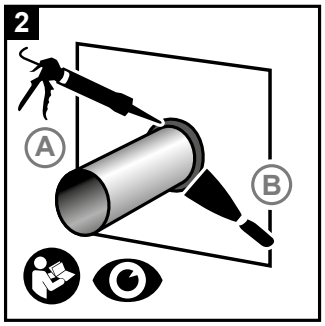

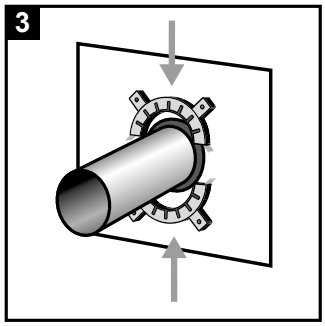

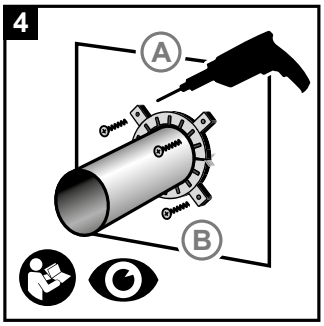

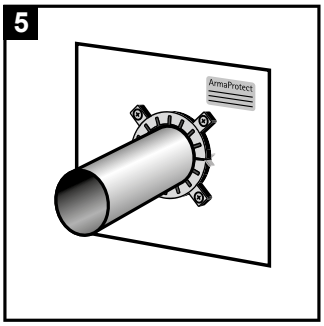

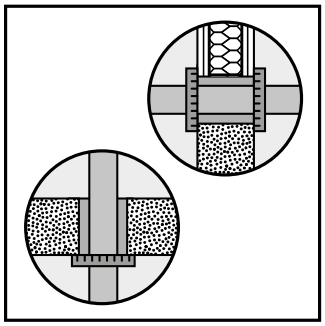

// Consumption guide

Choose ArmaProtect FC2 Firestop collar based on the pipe diameter.

Standard pipe application:

- 2 firestop collars for wall penetration (installation of firestop collar from both sides)
- 1 firestop collar for floor penetration (installation of firestop collar on the bottom side of the floor)

Collar size (Ø) [mm]	D2 (Internal Ø) [mm]	D1 (External Ø) [mm]	H1 (Installation height) [mm]	Number of hooks
32	36	50	26.0	2
40	44	58	26.0	2
50	54	68	26.0	2
63	67	94	26.0	4
75	79	106	26.0	4
90	94	132	26.0	4
110	114	155	26.0	4

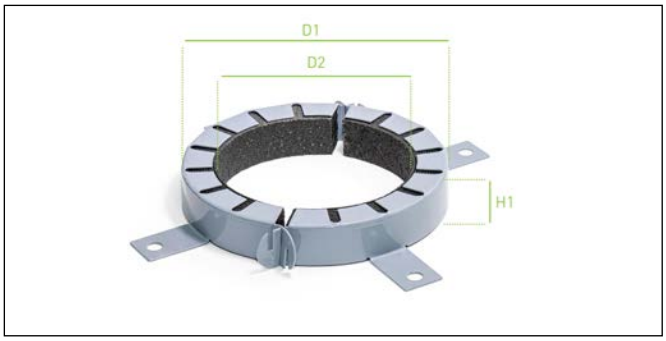

Collar size (Ø) [mm]	D2 (Internal Ø) [mm]	D1 (External Ø) [mm]	H1 (Installation height) [mm]	Number of hooks
125	129	172	26.0	4
140	144	200	40.0	6
160	164	220	40.0	6
180	184	264	40.0	8
200	204	284	40.0	8
225	239	328	51.5	10
250	264	353	51.5	10
280	289	378	51.5	12
300	314	403	51.5	12
315	328	417	51.5	12
355	370	459	51.5	12
400	415	504	51.5	12

MAIN APPLICATIONS ACC. ETA-22/0060

In drywalls and solid walls[1]

Base material	Drywall, concrete wall, aerated concrete wall, masonry wall
Base material thickness	≥ 100 mm
Maximum pipe diameter	up to 400 mm pipe diameter
Penetrants • Combustible pipe without insulation (≤ 400 mm)[1]	up to EI 120-U/U[1]

[1] See ETA 22/0060 for further installation details.

Concrete floors[1]

Base material	Concrete floors
Base material thickness	≥ 150 mm (wall)
Maximum pipe diameter	up to 400 mm pipe diameter
Penetrants • Combustible pipe without insulation (≤ 400 mm)[1]	up to EI 120-U/U[1]

[1] See ETA 22/0060 for further installation details.

// Field of application and installation details[1]

Installation details

Base material thickness	
Flexible wall (drywall) or rigid wall (concrete, aerated concrete, masonry)	≥ 100mm
Rigid floor (concrete, aerated concrete) (density ≥550 kg/m³)	≥ 150mm

Annular gap	≤ 20 mm
Gap filler	Mineral construction material (class A1 or A2), eg. cement, mortar or gypsum
Fixing of firestop collar	Flexible wall: continuous M8 threaded steel rods in conjunction with M8 hexagon nuts ("push-through" installation) Rigid wall and floor: 2 - 14 x 38mm metal multi-purpose anchors in conjunction with MMS-P 7.5 x 45mm steel bolts and corresponding washers and nuts.

First support of the pipes both-sided of the separating element	≤ 470mm

Distances	≥ 100mm between two single penetration seals of insulated (from the insulation) / non-insulated (from the pipe wall) pipes

[1] Please see further installation detail in the ETA-22/0060

Applications

Application in coated firestop board system in flexible wall, rigid wall and rigid floor

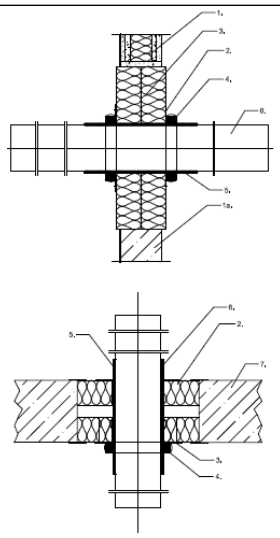

1. flexible wall ≥ 100 mm
1a. rigid wall ≥ 100 mm
2. mineral fibre board
3. fastener
4. pipe collar
5. noise insulation made of PE
6. combustible pipe
7. rigid floor ≥150 mm

dimensions in mm

Application in flexible wall in flexible wall and rigid wall

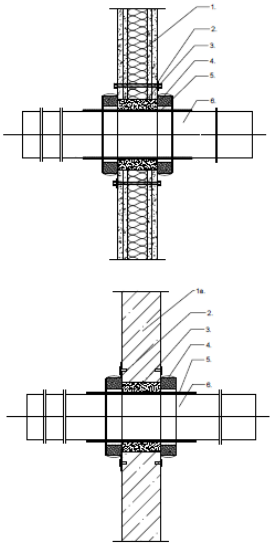

1. flexible wall ≥ 100 mm
1a. rigid wall ≥ 100 mm
2. fastening
3. annular gap
4. pipe collar
5. noise insulation made of PE
6. combustible pipe

dimensions in mm

Application in rigid wall, diagonally, 45°

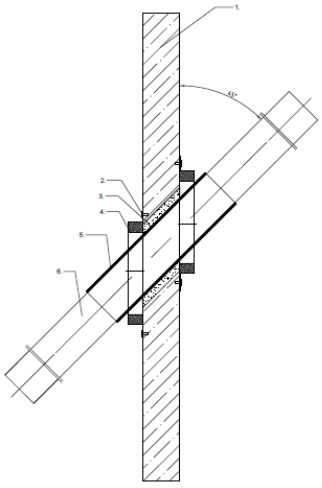

1a. rigid wall ≥ 100 mm
2. fastening
3. annular gap
4. pipe collar
5. noise insulation made of PE
6. combustible pipe

dimensions in mm

Application in rigid floor, diagonally, 45° bends

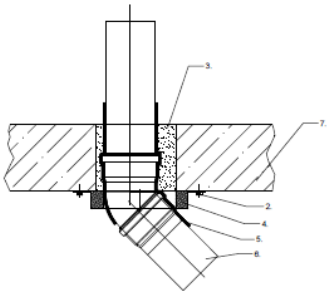

2. fastening
3. annular gap
4. pipe collar
5. combustible pipe
6. noise insulation made of PE
7. floor ≥ 150 mm

dimensions in mm

Application in rigid floor, firestop collar with zero distance

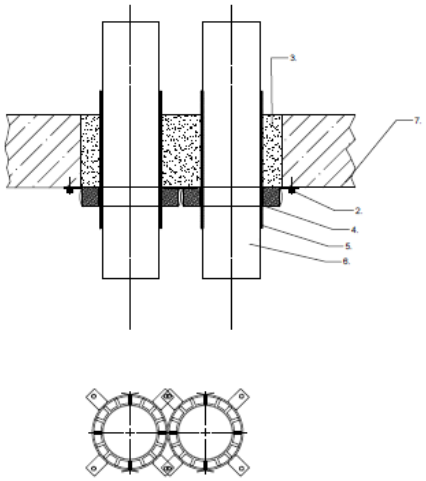

2. fastening
3. annular gap
4. pipe collar
5. combustible pipe
6. noise insulation made of PE
7. floor ≥ 150 mm

dimensions in mm

Application in rigid floor, with sleeve

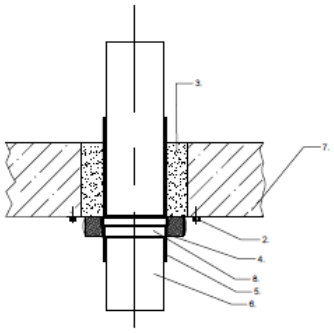

2. fastening
3. annular gap
4. pipe collar
5. combustible pipe
6. noise insulation made of PE
7. ≥ 150 mm
8. socket

dimensions in mm

Application in rigid floor, firestop collar casted in floor

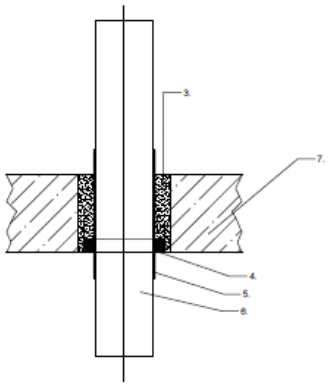

3. annular gap
4. pipe collar
5. combustible pipe
6. noise insulation made of PE
7. ^floor ≥ 150 mm

dimensions in mm

Resistance to Fire

Wall application

Pipe ø (mm)	Pipe wall thickness (mm)	Insulation (mm)	Assembly direction	Base material	Base material thickness (mm)	Classification
PVC-U pipes						
50 - 160	1,8 - 12,3	-	straight	flexible wall & rigid wall	⩾ 100	EI 90-U/U
32 - 50	1,8 - 5,6					EI 120-U/U
90 - 160	1,8 - 3,2	5 (PE)				EI 60-U/U
32 - 160	2,7 - 4,6					EI 120-U/U
110	10					
	1,8	-	diagonally, 45°			EI 120-U/C
180 - 200	4 - 9,6		straight	rigid wall		
225 - 400	5 - 11,7				⩾ 300	
PE-HD pipes						
32 - 110	1,8 – 10	-	straight	flexible wall & rigid wall	⩾ 100	EI 120-U/C
125 - 160	4,0 - 14,6					
50	4,6		diagonally, 45°			
110	2,7					
50 - 160	1,9 - 14,6		straight			EI 90-U/U
⩽ 50	1,8 - 4,6					EI 120-U/U
110	2,7					
180 - 200	4,9 - 11,4			rigid wall		EI 120-U/C
225 - 400	9,8 - 22,7				⩾ 300	
PP-H pipes						
32 - 110	1,8 – 10	-	straight	flexible wall & rigid wall	⩾ 100	EI 120-U/C
125 - 160	4,0 - 14,6					
50 - 160	1,9 - 14,6					EI 90-U/U
110	2,7					EI 120-U/U
⩽ 50	1,8 - 4,6					
180 - 200	4,9 - 18,2			rigid wall		EI 120-U/C

Pipe ø (mm)	Pipe wall thickness (mm)	Insulation (mm)	Assembly direction	Base material	Base material thickness (mm)	Classification
aquatherm blue pipe SDR 9 MF RP pipes						
32	3,6	5 (PE)	straight	flexible wall & rigid wall	≥ 100	EI 120-U/C
		22 - 39,5 (FEF, LS, ≥ 800mm)				
aquatherm blue pipe SDR 11 MF RP pipes						
40	3,7	5 (PE)	straight	flexible wall & rigid wall	≥ 100	EI 120-U/C
50	4,6					
63	5,8					
75	6,8					
90	8,2					
110	10					
125	11,4					
160	14,6					
200	18,2					
40	3,7	22 - 39,5 (FEF, (LS, ≥ 800mm)				
50	4,6					
63	5,8					
75	6,8					
90	8,2					
110	10	19 (FEF, LS, ≥ 800mm)				
125	11,4					
160	14,6					
		19 (FEF, LS, ≥ 800) or 38 (FEF, LS, ≥ 940)		rigid wall	≥ 300	EI 120-U/C
200	18,2	19 – 38 (FEF, LS, ≥ 940mm)				
250	22,7	19 – 38 (FEF, LS, ≥ 1000mm)				EI 90-U/C
315	28,6					
355	32,2	19 (FEF, LS, ≥ 1000mm)				
250	22,7	5 (PE)			≥ 240	EI 120-U/C
315	28,6					EI 90-U/C
355	32,2					

Pipe ø (mm)	Pipe wall thickness (mm)	Insulation (mm)	Assembly direction	Base material	Base material thickness (mm)	Classification
aquatherm blue pipe SDR 17,6 MF RP pipes						
125	7,1	5 (PE)	straight	flexible wall & rigid wall	≥ 100	EI 120-U/C
160	9,1					
200	11,4					
250	14,2			rigid wall	≥ 240	
315	17,9					EI 45-U/C
355	20,1					
125	7,1	19 (FEF, LS, ≥ 800) or 50 (FEF, LS, ≥ 940)				EI 120-U/C
160	9,1	19 (FEF, LS, ≥ 800mm)				
200	11,4	19 (FEF, LS, ≥ 940mm)				
160	9,1	19 (FEF, LS, ≥ 800) or 38mm (FEF, LS, ≥ 940)			≥ 300	
200	11,4	19 – 38 (FEF, LS, ≥ 940mm)				
250	14,2	19 – 38 (FEF, LS, ≥ 1000mm)				EI 90-U/C
315	17,9	19 – 50 (FEF, LS, ≥ 1000mm)				EI 120-U/C
355	20,1	19 (FEF, LS, ≥ 1000mm)				EI 90-U/C
aquatherm blue pipe SDR 9 MF RP OT pipes						
32	3,6	5 (PE) or 18 - 39,5 (FEF, LS, ≥ 800mm)	straight	flexible wall & rigid wall	≥ 100	EI 120-U/C
aquatherm blue pipe SDR 11 MF RP OT pipes						
40	3,7	5 (PE)	straight	flexible wall & rigid wall	≥ 100	EI 120-U/C
50	4,6					
125	11,4					
250	22,7			rigid wall	≥ 240	

Pipe ø (mm)	Pipe wall thickness (mm)	Insulation (mm)	Assembly direction	Base material	Base material thickness (mm)	Classification
aquatherm green pipe SDR 9 MF RP pipes						
32	3,6	5 (PE)	straight	flexible wall & rigid wall	≥ 100	EI 120-U/C
40	4,5					
50	5,6					
63	7,1					
75	8,4					
90	10					
110	12,3					
125	14					
160	17,9					
200	22,4					
32	3,6	18 - 39,5 (FEF, LS, ≥ 800mm)				
40	4,5	22 - 39,5 (FEF, LS, ≥ 800mm)				
50	5,6					
63	7,1					
75	8,4	22 – 50 (FEF, LS, ≥ 800mm)				
90	10	22,5 – 50 (FEF, LS, ≥ 800mm)				
110	12,3	19 (FEF, LS, ≥ 800mm)				
125	14					
160	17,9					
200	22,4	19 (FEF, LS, ≥ 940mm)		rigid wall	≥ 240	
250	27,9	5 (PE)				
315	35,2					
355	39,7					
160	17,9	19 (FEF, LS, ≥ 800mm) 38 (FEF, LS, ≥ 940mm)			≥ 300	
200	22,4	19 – 38 (FEF, LS, ≥ 940mm)				
250	27,9	19 – 50 (FEF, LS, ≥ 1000mm)				
315	35,2					
355	39,7	19 (FEF, LS, ≥ 1000mm)				

Pipe ø (mm)	Pipe wall thickness (mm)	Insulation (mm)	Assembly direction	Base material	Base material thickness (mm)	Classification
aquatherm green pipe SDR 6 S						
32	5,4	5 (PE)	straight	flexible wall & rigid wall	≥ 100	EI 120-U/C
40	6,7					
50	8,3					
63	10,5					
75	12,5					
90	15					
110	18,3					
32	5,4	18 - 39,5 (FEF, LS, ≥ 800mm)				
40	6,7	22 - 39,5 (FEF, LS, ≥ 800mm)				
50	8,3					
63	10,5					
75	12,5	22 – 50 (FEF, LS, ≥ 800mm)				
90	15					
110	18,3	19 (FEF, LS, ≥ 800mm)				
aquatherm green pipe SDR 7,4 S						
32	4,4	5 (PE)	straight	flexible wall & rigid wall	≥ 100	EI 120-U/C
40	5,5					
50	6,9					
63	8,6					
32	4,4	18 - 39,5 (FEF, LS, ≥ 800mm)				
40	5,5	22 - 39,5 (FEF, LS, ≥ 800mm)				
50	6,9					
63	8,6					

Pipe ø (mm)	Pipe wall thickness (mm)	Insulation (mm)	Assembly direction	Base material	Base material thickness (mm)	Classification
aquatherm green pipe SDR 11 S						
32	2,9	5 (PE)	straight	flexible wall & rigid wall	≥ 100	EI 120-U/C
40	3,7					
50	4,6					
63	5,8					
75	6,8					
90	8,2					
110	10					
125	11,4					
160	14,6					
200	18,2					
32	2,9	18 - 39,5 (FEF, LS, ≥ 800mm)				
40	3,7	22 - 39,5 (FEF, LS, ≥ 800mm)				
50	4,6					
63	5,8					
75	6,8	22 – 50 (FEF, LS, ≥ 800mm)				
90	8,2					
110	10	19 (FEF, LS, ≥ 800mm)				
125	11,4					
160	14,6					
200	18,2	19 (FEF, LS, ≥ 940mm)		rigid wall	≥ 240	EI 120-U/C
250	22,7	5 (PE)				EI 90-U/C
315	28,6					
coes Blue Power Z-42.1-411 pipes						
50	1,8	4 (PE)	straight	flexible wall & rigid wall	≥ 100	EI 120-U/C
50 - 90	1,8 - 3,4		straight sleeve			
110	3,4					EI 90-U/C
Conel Drain Z-42.1-510 pipes						
40 - 160	1,8 - 3,9	5 (PE)	straight	flexible wall & rigid wall	≥ 100	EI 120-U/U

Pipe ø (mm)	Pipe wall thickness (mm)	Insulation (mm)	Assembly direction	Base material	Base material thickness (mm)	Classification
Geberit Silent PP Z-42.1-432 pipes						
32 - 160	2 - 5,2	5 (PE)	straight	flexible wall & rigid wall	≥ 100	EI 120-U/U
125 - 160	4,2 - 5,2	4 (PE)	straight, zero distance			EI 90-U/C
50 - 110	2 - 3,6		straight, sleeve			EI 120-U/C
50 - 90	2 - 3,1		diagonally, 45°			EI 90-U/C
110	3,6					EI 120-U/C
50 - 110	2 - 3,6		2 x 45° bends			
Geberit Silent Pro Z-42.1-542 pipes						
50 - 160	3 - 6	5 (PE)	straight	flexible wall & rigid wall	≥ 100	EI 120-U/U
50 - 110	2,6 - 4,1		straight, sleeve			
Geberit Silent dB 20 Z-42.1-265 pipes						
56 - 110	3,2 – 6	5 (PE)	straight	flexible wall & rigid wall	≥ 100	EI 120-U/U
56 - 160	3,2 - 7					EI 90-U/U
Georg Fischer Silenta Premium Z-42.1-537						
58 - 160	4 - 5,3	4 (PE)	straight	flexible wall & rigid wall	≥ 100	EI 120-U/U
110 - 135	5,3		straight, zero distance			
58 - 110	4 - 5,3		straight, sleeve			
58	4		diagonally, 45°			
78 - 110	4,6 - 5,3					
Georg Fischer Cool-Fit 2.0 / 2.0F pipes						
32/75 -140/200	-	-	straight	flexible wall & rigid wall	≥ 100	EI 120-U/C
Georg Fischer Cool-Fit 4.0 pipes						
110/180	-	-	straight	flexible wall & rigid wall	≥ 100	EI 120-U/C
63/110	-					
160/250	-			rigid wall	≥ 240	
225/315 - 355/500	-				≥ 300	EI 90-U/C
Georg Fischer Cool-Fit 4.0F pipes						
160/250 - 225/315	-	-	straight	rigid wall	≥ 240	EI 120-U/C

Pipe ø (mm)	Pipe wall thickness (mm)	Insulation (mm)	Assembly direction	Base material	Base material thickness (mm)	Classification
KE KELIT PHONEX AS pipes						
58 - 160	4 - 5,3	5 (PE)	straight	flexible wall & rigid wall	≥ 100	EI 120-U/U
Pelletschlauch PVC-Cu pipes						
60	-	-	straight	flexible wall & rigid wall	≥ 100	EI 120-U/C
Pelletschlauch PUR-Cu pipes						
60	-	-	straight	flexible wall & rigid wall	≥ 100	EI 120-U/C
Pipelife Master 3 Plus Z-42.1-481 pipes						
40 - 160	1,8 - 4,4	5 (PE)	straight	flexible wall & rigid wall	≥ 100	EI 120-U/U
POLO-KAL 3S Z-42.1-341 pipes						
75	3,8	-	straight	flexible wall & rigid wall	≥ 100	EI 60-U/C
125	5,3					
110	4,8	4 (PE)				
125	5,3					EI 90-U/C
160	7,5					EI 60-U/C
110	4,8		straight, sleeve			
125	5,3	-	diagonally, 45°	rigid wall	≥ 100	EI 120-U/C
75	3,8	4 (PE)				
125	5,3					
POLO-KAL NG Z-42.1-241 pipes						
40 - 110	1,8 - 3,4	5 (PE)	straight	flexible wall & rigid wall	≥ 100	EI 120-U/U
50 - 110	2,0 - 3,4	4 (PE)	straight, sleeve			
POLO-KAL XS Z-42.1-506 pipes						
40 - 110	1,8 - 3,4	5 (PE)	straight	flexible wall & rigid wall	≥ 100	EI 120-U/U
50 - 110	2,0 - 3,4	4 (PE)	straight, sleeve			

Pipe ø (mm)	Pipe wall thickness (mm)	Insulation (mm)	Assembly direction	Base material	Base material thickness (mm)	Classification
Rehau Raupiano light Z-42.1-508 pipes						
40 - 160	1,8 - 3,9	5 (PE)	straight	flexible wall & rigid wall	≥ 100	EI 120-U/U
Rehau Raupiano Plus Z-42.1-223 pipes						
50 - 160	1,8 - 3,9	5 (PE)	straight	flexible wall & rigid wall	≥ 100	EI 120-U/U
Valsir TriPLUS Z-42.1-426 pipes						
32 - 160	1,8 - 4,9	5 (PE)	straight	flexible wall & rigid wall	≥ 100	EI 120-U/U
Wavin SiTECH+ Z-42.1-539 pipes						
32 - 160	1,8 - 5	5 (PE)	straight	flexible wall & rigid wall	≥ 100	EI 120-U/C
32 - 75	1,8 - 2,6	4 (PE)	straight, sleeve			
32 - 125	1,8 - 3,9	9 - 40 (FEF)	straight			
Wavin AS Z-42.1-228 pipes						
58 - 160	4 - 5,3	5 (PE)	straight	flexible wall & rigid wall	≥ 100	EI 120-U/U

Floor application

PVC-U pipes

Pipe ø (mm)	Pipe wall thickness (mm)	Insulation (mm)	Assembly direction	Base material	Base material thickness (mm)	Classification
32 - 50	1,8 - 5,6	-	straight	rigid floor	⩾ 150	EI 120-U/U
⩽ 75	1,8					
> 50 - ⩽ 160	1,8 - 12,3					EI 90-U/U
63 - 75	2,2 - 8,4					EI 120-U/C
90 - 110	2,2 - 12,3					
110	8,2	4 (PE)	diagonally, 45°			
125 - 160	3,2 - 11,8	-	straight			
180 - 200	4 - 9,6					
225 - 400	5 - 11,7				⩾ 300	

PE-HD pipes

Pipe ø (mm)	Pipe wall thickness (mm)	Insulation (mm)	Assembly direction	Base material	Base material thickness (mm)	Classification
32 – 50	1,8 - 4,6	-	straight	rigid floor	⩾ 150	EI 120-U/U
50 – 125	1,8 - 14,6					
> 125 - ⩽ 160	4 - 14,6					EI 60-U/U
160	4	5 (PE)				EI 90-U/U
63 - 75	2,7 - 6,9	-				EI 120-U/C
90 - 110	2,7 - 10					
50 - 110	4,6 – 10	4 (PE)	diagonally, 45°			
125 - 160	4 - 14,6	-	straight			
180 - 200	4,9 - 18,2					
225 - 400	9,8 - 22,7				⩾ 300	

PP-H pipes

Pipe ø (mm)	Pipe wall thickness (mm)	Insulation (mm)	Assembly direction	Base material	Base material thickness (mm)	Classification
⩽ 50	1,8 - 4,6	-	straight	rigid floor	⩾ 150	EI 120-U/U
⩽ 75	1,9 – 10					EI 90-U/U
	10					EI 120-U/U
⩽ 110	2,7 – <10					EI 90-U/U
110	2,7					EI 120-U/U
	10					
⩽ 125	3,1 – <11,4					EI 90-U/U
	11,4					EI 120-U/U
⩽ 160	4 - 14,6					
63 - 75	2,7 - 6,9					EI 120-U/C
90 - 110	2,7 - 10					
125 - 160	4 - 14,6					
180 - 200	4,9 - 11,4					
225 - 315	7,7 - 19,6				⩾ 300	EI 90-U/C
315	7,7					EI 120-U/C

Pipe ø (mm)	Pipe wall thickness (mm)	Insulation (mm)	Assembly direction	Base material	Base material thickness (mm)	Classification
aquatherm blue pipe SDR 9 MF RP						
32	3,6	5 (PE) or 22 - 39,5 FEF (LS, ≥ 850mm)	straight	rigid floor	≥ 150	EI 120-U/C
aqatherm blue pipe SDR 11 MF RP pipes						
40	3,7	5 (PE)	straight	rigid floor	≥ 150	EI 120-U/C
50	4,6					
63	5,8					
75	6,8					
90	8,2					
110	10					
125	11,4					
160	14,6					
200	18,2					
250	22,7				≥ 200	
315	28,6					EI 90-U/C
40	3,7	22 - 39,5 (FEF, LS, ≥ 850mm)			≥ 150	EI 120-U/C
50	4,6					
63	5,8					
75	6,8	22 – 50 (FEF, LS, ≥ 850mm)				
90	8,2					
110	10	22,5 (FEF, LS, ≥ 850mm)				
125	11,4	19 (FEF, LS, ≥ 850mm)				
160	14,6					
110	10	19 – 50 (FEF, LS, ≥ 850mm)			≥ 200	
125	11,4					
160	14,6	19 (FEF, LS, ≥ 850mm)				
200	18,2					
160	14,6	19 – 38 (FEF, LS, ≥ 850mm)			≥ 300	
200	18,2					
250	22,7					
315	28,6					
355	32,2	19 (FEF, LS, ≥ 850mm)				

Pipe ø (mm)	Pipe wall thickness (mm)	Insulation (mm)	Assembly direction	Base material	Base material thickness (mm)	Classification
aqatherm blue pipe SDR 17,6 MF RP pipes						
125	7,1	5 (PE)	straight	rigid floor	≥ 150	EI 120-U/C
160	9,1					
200	11,4					
250	14,2				≥ 200	
315	17,9					EI 45-U/C
125	7,1	19 (FEF, LS, ≥ 850mm)			≥ 150	EI 120-U/C
160	9,1					
125	7,1	19 – 50 (FEF, LS, ≥ 850mm)			≥ 200	
200	11,4	19 (FEF, LS, ≥ 850mm)				
160	9,1	19 – 38 (FEF, LS, ≥ 850mm)			≥ 300	
200	11,4					
250	14,2					
315	17,9					
355	20,1	19 (FEF, LS, ≥ 850mm)				
aquatherm blue pipe SDR 9 MF RP OT pipes						
32	3,6	5 (PE)	straight	rigid floor	≥ 150	EI 120-U/C
40	3,7					
50	4,6					
63	5,8					
75	6,8					
90	8,2					
110	10					
125	11,4					
160	14,6					
200	18,2					
250	22,7					

Pipe ø (mm)	Pipe wall thickness (mm)	Insulation (mm)	Assembly direction	Base material	Base material thickness (mm)	Classification
aquatherm green pipe SDR 9 MF RP pipes						
32	3,6	5 (PE)	straight	rigid floor	≥ 150	EI 120-U/C
40	4,5					
50	5,6					
63	7,1					
75	8,4					
90	10					
110	12,3					
125	14					
160	17,9					
200	22,4					
250	27,9				≥ 200	
315	35,2					
355	39,7					
32	3,6	22 - 39,5 (FEF, LS, ≥ 850mm)			≥ 150	
40	4,5					
50	5,6					
63	7,1					
75	8,4	22 - 50 (FEF, LS, ≥ 850mm)				
90	10					
110	12,3	22,5 (FEF, LS, ≥ 850mm)				
125	14	19 (FEF, LS, ≥ 850mm)				
160	17,9					
110	12,3	19 - 50 (FEF, LS, ≥ 850mm)			≥ 200	
125	14					
160	17,9	19 (FEF, LS, ≥ 850mm)				
200	22,4					
160	17,9	19 - 38 (FEF, LS, ≥ 850mm)			≥ 300	
200	22,4					
250	27,9					
315	35,2					
355	39,7	19 (FEF, LS, ≥ 850mm)				

Pipe ø (mm)	Pipe wall thickness (mm)	Insulation (mm)	Assembly direction	Base material	Base material thickness (mm)	Classification
aquatherm green pipe SDR 6 S pipes						
32	5,4	5 (PE)	straight	rigid floor	≥ 150	EI 120-U/C
40	6,7					
50	8,3					
63	10,5					
75	12,5					
90	15					
110	18,3					
32	5,4	22 - 39,5 (FEF, LS, ≥ 850mm)				
40	6,7					
50	8,3					
63	10,5					
75	12,5	22 – 50 (FEF, LS, ≥ 850mm)				
90	15	22,5 – 50 (FEF, LS, ≥ 850mm)				
110	18,3	22,5 (FEF, LS, ≥ 850mm)				
		19 – 50 (FEF, LS, ≥850mm)			≥ 200	
aquatherm green pipe SDR 7,4 S pipes						
32	4,4	5 (PE)	straight	rigid floor	≥ 150	EI 120-U/C
40	5,5					
50	6,9					
63	8,6					
32	4,4	22 - 39,5 (FEF, LS, ≥ 850mm)				
40	5,5					
50	6,9					
63	8,6					

Pipe ø (mm)	Pipe wall thickness (mm)	Insulation (mm)	Assembly direction	Base material	Base material thickness (mm)	Classification
aquatherm green pipe SDR 11 S pipes						
32	2,9	5 (PE)	straight	rigid floor	⩾ 150	EI 120-U/C
40	3,7					
50	4,6					
63	5,8					
75	6,8					
90	8,2					
110	10					
125	11,4					
160	14,6					
200	18,2					
250	22,7				⩾ 200	
315	28,6				⩾ 200	
32	2,9	22 - 39,5 (FEF, LS, ⩾ 850mm)			⩾ 150	
40	3,7					
50	4,6					
63	5,8					
75	6,8	22 - 50 (FEF, LS, ⩾ 850mm)				
90	8,2					
110	10	22,5 (FEF, LS, ⩾ 850mm)				
125	11,4	19 (FEF, LS, ⩾ 850mm)				
160	14,6					
110	10	19 – 50 (FEF, LS, ⩾ 850mm)			⩾200	
125	11,4					
160	14,6	19 (FEF, LS, ⩾ 850mm)				
200	18,2					
160	14,6	19 – 38 (FEF, LS, ⩾ 850mm)			⩾300	
200	18,2					
250	22,7					
315	28,6	19 (FEF, LS, ⩾ 850mm)				

Pipe ø (mm)	Pipe wall thickness (mm)	Insulation (mm)	Assembly direction	Base material	Base material thickness (mm)	Classification
Conel Drain Z-42.1-510 pipes						
50 - 110	1,8 - 2,7	4 (PE)	straight	rigid floor	≥ 150	EI 120-U/C
			straight, sleeve			
			2x45° bends			
75 - 110	1,9 - 2,7	5 (PE)	straight			EI 90-U/U
40 - 110	1,8 - 2,7					EI 60-U/U
Geberit Silent PP Z-42.1-432 pipes						
50 - 160	1,8 - 4,9	4 (PE)	straight	rigid floor	≥ 150	EI 120-U/C
125 - 160	3,9 - 4,9		straight, zero distances			
50 - 110	1,8 - 3,4		straight, sleeve			
			diagonally, 45°			
			2x45° bends			
40 - 110	2,0 - 3,6	5 (PE)	straight			EI 90-U/U
40 - 160	2,0 - 5,2					EI 60-U/U
Geberit Silent Pro Z-42.1-542						
50 – 160	2,6 - 5,6	5 (PE)	straight	rigid floor	≥ 150	EI 120-U/U
		9 - 25 (FEF)				
50 - 90	2,6 - 3,9	5 (PE)	straight, sleeve			
50 - 110	2,6 - 4,1		2x45° bends			
125	4,6					EI 90-U/U
50 - 110	2,6 - 4,1		straight, collar in floor			EI 120-U/U

Pipe ø (mm)	Pipe wall thickness (mm)	Insulation (mm)	Assembly direction	Base material	Base material thickness (mm)	Classification
Georg Fischer Silenta Premium Z-42.1-537						
58 - 160	4,0 - 5,3	4 (PE)	straight	rigid floor	≥ 150	EI 120-U/U
110 - 135	5,3		straight, zero distances			
58 - 110	4 - 5,3		straight, sleeve			
			2 x 45° bends			
Georg Fischer Cool-Fit 2.0 / 2.0F pipes						
32/75 - 110/160	-	-	straight	rigid floor	≥ 150	EI 120-U/C
140/200						EI 90-U/C
Georg Fischer Cool-Fit 4.0 pipes						
110/180 - 160/250	-	-	straight	rigid floor	≥ 150	EI 90-U/C
280/400 - 355/500						EI 120-U/C
Georg Fischer Cool-Fit 4.0F pipes						
63/125	-	-	straight	rigid floor	≥ 150	EI 120-U/C
75/140 - 160/250						EI 90-U/C
225/315						EI 120-U/C
Pelletschlauch PVC-Cu pipes						
60	-	-	straight	rigid floor	≥ 150	EI 120-U/C
Pelletschlauch PUR-Cu pipes						
60	-	-	straight	rigid floor	≥ 150	EI 120-U/C

Pipe ø (mm)	Pipe wall thickness (mm)	Insulation (mm)	Assembly direction	Base material	Base material thickness (mm)	Classification
POLO-KAL 3S Z-42.1-341 pipes						
75 – 110	3,8 - 4,8	-	straight	rigid floor	≥ 150	EI 90-U/C
		4 (PE)	straight, sleeve			
			diagonally, 45°			
125	5,3	-	diagonally, 45°			
		4 (PE)	diagonally, 35°			EI 120-U/C
			2x45° bends			
POLO-KAL NG Z-42.1-241 pipes						
90 - 160	3 - 4,9	5 (PE)	straight	rigid floor	≥ 150	EI 90-U/U
40 - 160	1,8 - 4,9					EI 60-U/U
POLO-KAL XS Z-42.1-506 pipes						
50 - 110	1,8 - 3,4	4 (PE)	straight, sleeve	rigid floor	≥ 150	EI 120-U/U
			2x45° bends			
90 - 160	3 - 4,9		straight			EI 90-U/U
40 - 160	1,8 - 4,9	5 (PE)	straight			EI 60-U/U
Ostendorf Skolan dB Z-42.1-217 pipes						
110	5,3	4 (PE)	straight	rigid floor	≥ 150	EI 120-U/C
Rehau Raupiano plus Z-42.1-223 pipes						
110	2,7	4 (PE)	straight	rigid floor	≥ 150	EI 120-U/C
Rehau Raupiano light Z-42.1-508 pipes						
75 - 110	1,9 - 2,7	5 (PE)	straight	rigid floor	≥ 150	EI 90-U/U
40 - 110	1,8 - 2,7					EI 60-U/U
Valsir Z-42.1-426 TriPLUS pipes						
32 - 50	1,8	5 (PE)	straight	rigid floor	≥ 150	EI 90-U/U
Wavin SITECH Z-42.1-403 pipes						
110	3,4	4 (PE)	straight	rigid floor	≥ 150	EI 120-U/C
Wavin SiTECH+Z-42.1-539 pipes						
32 - 160	1,8 - 4,9	4 (PE)	straight	rigid floor	≥ 150	EI 120-U/C
50 - 160	1,8 - 4,9	9 - 34 (FEF)				
50 + 125	1,8 + 3,9	4 (PE)	2x45° bends			
32, 75 - 160	1,8, 2,6 - 5,0	5 (PE)	straight			EI 90-U/U
58 - 110	4,1 - 5,3					EI 60-U/U

TECHNICAL DATA - ARMAPROTECT FC2 FIRESTOP COLLAR

Brief description	ArmaProtect FC2 is a solid metal sleeve equipped with several layers of intumescent material to maintain the fire resistance performance of fire penetrations in walls and floors.
Material type	Powder-coated sheet steel housing (Ø up to 200mm) / galvanised sheet steel housing (Ø ≥ 225mm) with flexible intumescent strip.
Product colour range	Housing is grey and inlay is anthracite.
Special features	Easy visual inspection.
Product range	32mm to 400mm diameter.
Applications	Firestop collar for sealing combustible pipes without insulation.
Installation	For professional use only. Refer to third party published listings, national approvals / assessments and Armacell's product literature for specific application details as well as before handling this product.
Declaration of Performance (DoP)	ArmaProtect FC2

Approvals and compliance	
Specification compliance	• ETA 22/0060 acc. EN 1366-3

Property	Value/Assessment	Standard/Test method
Temperature range		
Operating temperature	-40°C to 70°C (40°F to 158°F)	
Application temperature	5°C to 25°C (41°F to 77°F)	
Storage and transportation temperature	5°C to 30°C (41°F to 77°F)	
Mechanical properties		
Expansion ratio	Inlay: 18 to 38 times	ETA 22/0060
Fire performance		
Reaction to fire	Housing: Class A1 Inlay: Class E	EN 13501-1
Resistance to fire	See Annex	
Health and environment		
Emission of dangerous substances	No dangerous substances.	ETAG 026-02
Other technical features		
Durability and serviceability	Use category type X	EOTA TR 024
Safety information	Please refer to the safety data sheet available on our website.	
Storage	Store in a cool and dry place with an ambient temperature of 5 °C to 25 °C and protect from frost.	

ArmaProtect

EFC1 and EFC2
Endless firestop collar

INSTRUCTIONS FOR USE

Ensure that surfaces are dry and free of dust and grease.

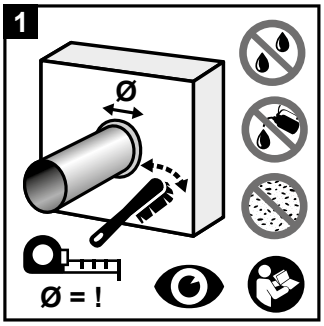

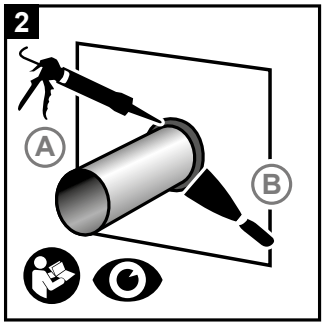

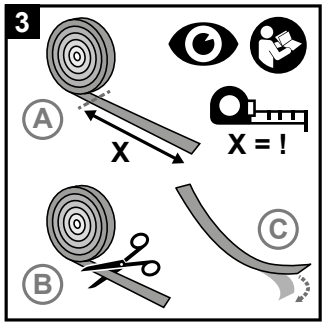

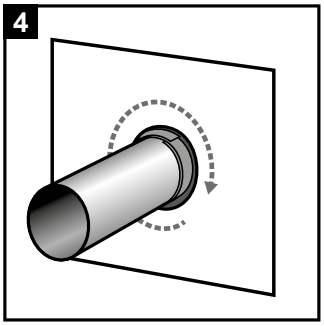

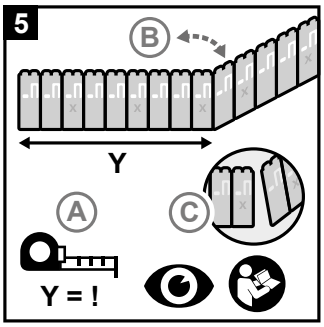

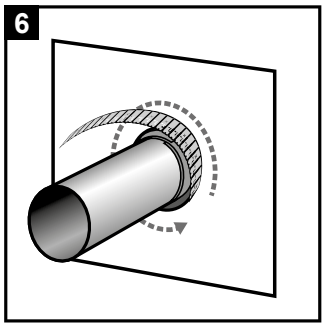

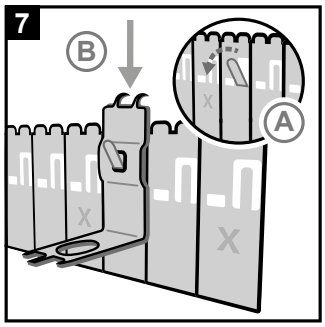

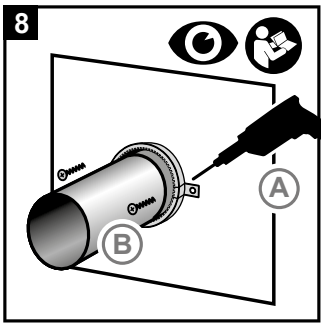

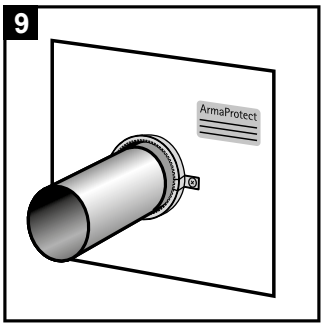

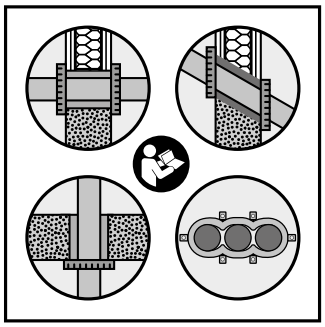

// Consumption guide

Check usage of stainless steel strap and firestop inlay of ArmaProtect EFC1 or EFC2 system on the diameter of the pipe with the required number of layers. Before cutting, consider the number of required layers and potential need of firestop wrap overlap according to third party published listings or national approvals / assessments.

Exemplary estimation based on pipe diameter

Pipe Ø [mm]	32	32	40	40	50	50	63	63	75	75
Insulation thickness [mm]	-	4	-	4	-	4	-	4	-	4
Number of layers	2	2	2	2	2	2	3	3	3	3
Required length for inlay	250	320	320	360	375	440	685	780	800	895
Number of steel strap elements	12	14	14	15	16	17	18	20	21	23
Number of hooks	2	2	2	2	2	2	3	3	3	3

Pipe Ø [mm]	90	90	110	110	125	125	140	140	160	160
Insulation thickness [mm]	-	4	-	4	-	4	-	4	-	4
Number of layers	4	4	4	4	5	5	6	6	6	6
Required length for inlay	1290	1400	1545	1660	2190	2425	2860	3050	3365	3530
Number of steel strap elements	25	27	29	31	32	34	36	38	40	42
Number of hooks	3	3	3	3	4	4	4	4	4	4

Take note of potential material loss during application at the job site.

MAIN APPLICATIONS ACC. ETA-22/0061

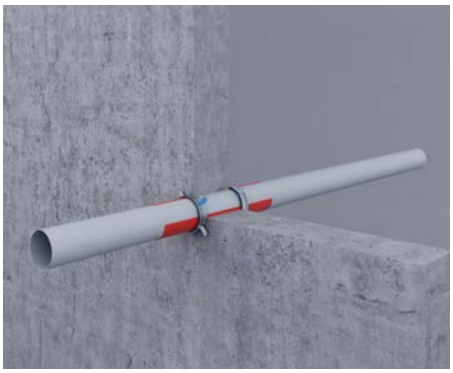

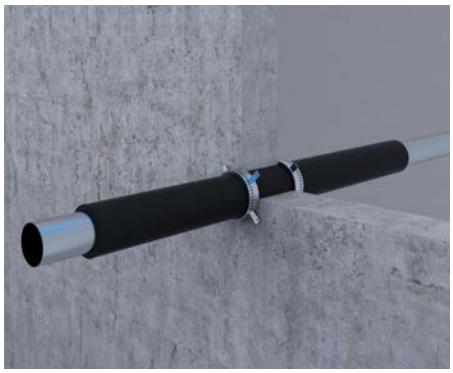

In drywalls, solid walls and concrete floors[1]	
Base material	Drywall, concrete wall, aerated concrete wall, masonry wall, shaft wall, concrete floor
Base material thickness	⩾ 100 mm (wall) ⩾ 40 mm (shaft wall) ⩾ 150 mm (floor)
Seal thickness	⩾ 100 mm (wall) ⩾ 40 mm (shaft wall) ⩾ 150 mm (floor)
Penetrants • Combustible pipes Ø ⩽ 160 mm (with & without sound insulation)[1] • Combustible pipes Ø ⩽ 110 mm (with combustible insulation)[1] • Non-combustible pipes Ø ⩽ 108 mm (with combustible insulation)[1] • Multi-layer composite pipes Ø ⩽ 110 mm[1]	up to EI 120 U/C resp. EI 120 U/U[1]

[1] Further applications tested also tested up to EI-240-U/C. See ETA 22/0061 for further installation details.

// Field of application and installation details[1]

Installation details

Base material thickness	
Flexible wall (drywall) or rigid wall (concrete, aerated concrete, masonry)	≥ 100mm (for flexible wall: ≥ 94mm)
Rigid floor (concrete, aerated concrete) (density ≥550 kg/m³)	≥ 150mm

Annular gap	Wall: ≤ 30mm Floor: ≤ 50mm Between plastic pipes (including insulation) "Wavin SiTech+", "Geberit Silent-PP", "POLO-KAL NG" or "RAUPIANO PLUS": ≤ 50mm
Gap filler	Mineral construction material (class A1 or A2), eg. cement, mortar or gypsum
Fixing of firestop collar	Steel dowels / steel screw anchors / steel flexible wall anchors with steel screws and washers

First support of the services both-sided of the separating element	≤ 650mm (metal and plastic pipes in walls) ≤ 550mm (metal pipes in floors) ≤ 400mm (plastic pipes in floors)

Distances	≥ 100mm between two single penetration seals of insulated (from the insulation) / non-insulated (from the pipe wall) pipes

[1] Please see further installation detail in the ETA-22/0061

Applications

Application of combustible pipe without insulation in flexible wall and rigid wall

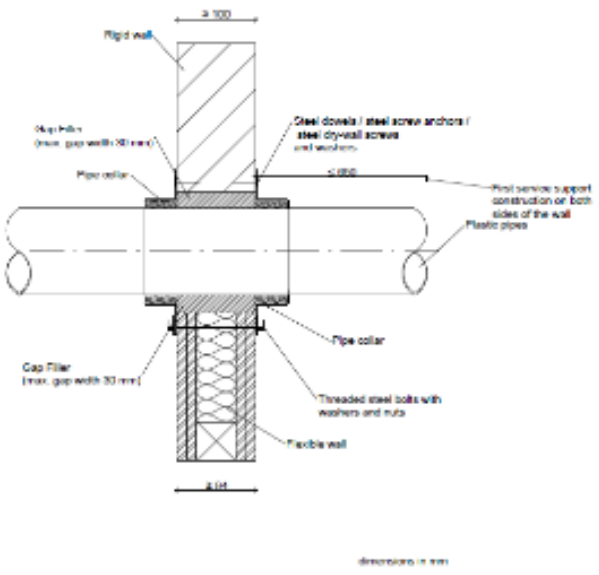

Application of combustible pipe without insulation with angle between 45° and 90° in flexible wall and rigid wall

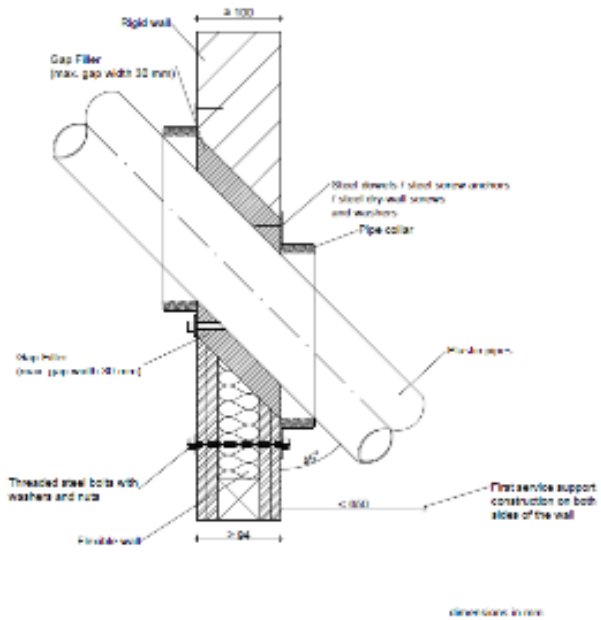

Application of combustible pipe with sound insulation in flexible wall and rigid wall

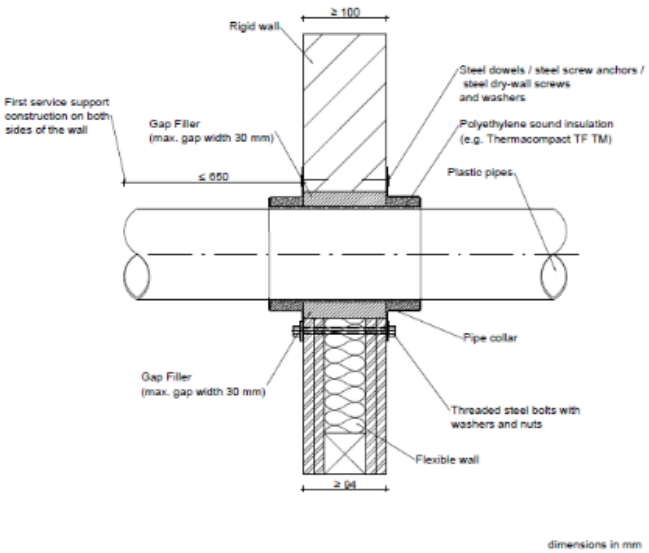

Application of combustible pipe with FEF (flexible elastomeric foam) insulation in flexible wall and rigid wall

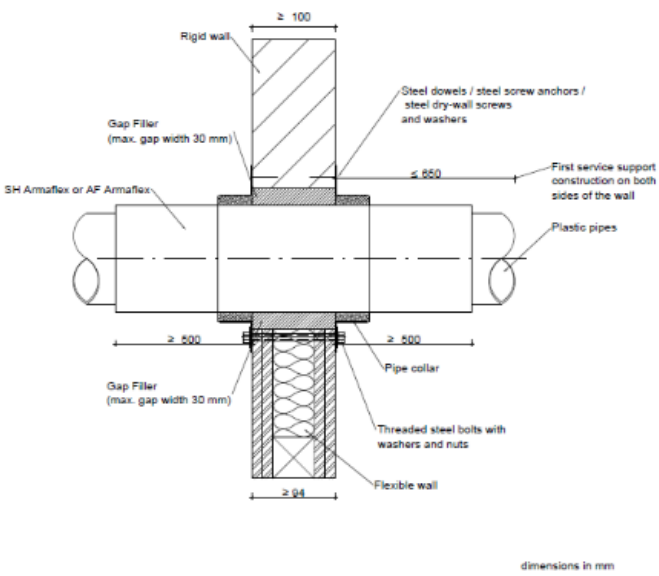

Application of combustible pipes in flexible wall and rigid wall (up to three pipes with zero distance)

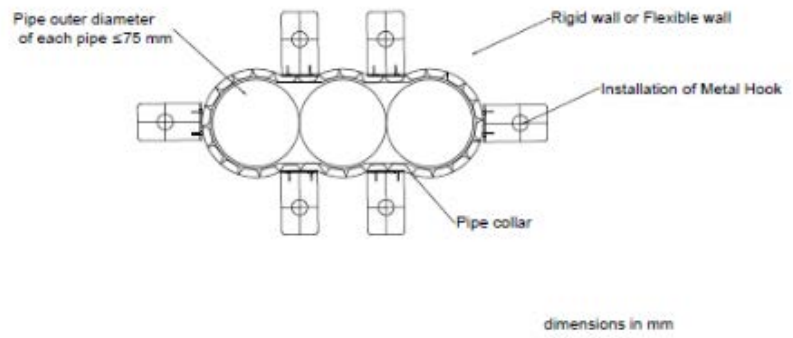

Application of non-combustible pipe with FEF (flexible elastomeric foam) insulation in flexible wall and rigid wall

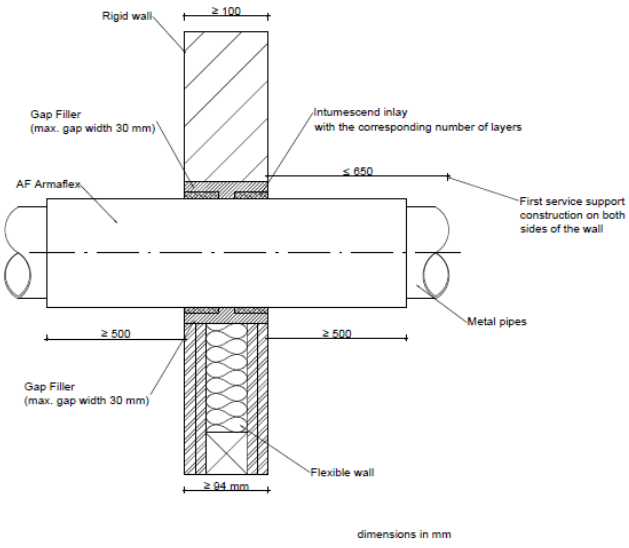

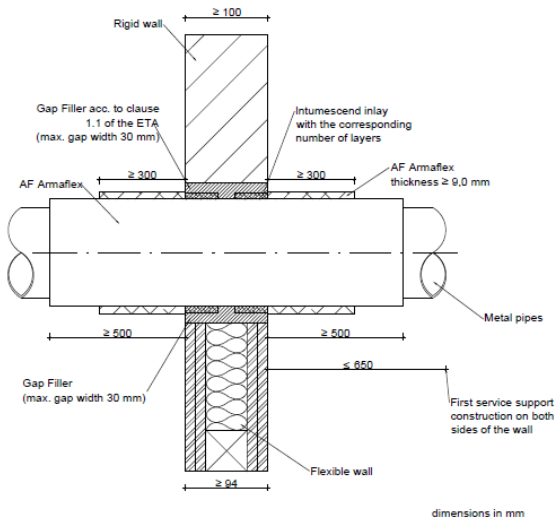

Application of combustible pipe without insulation in rigid floor

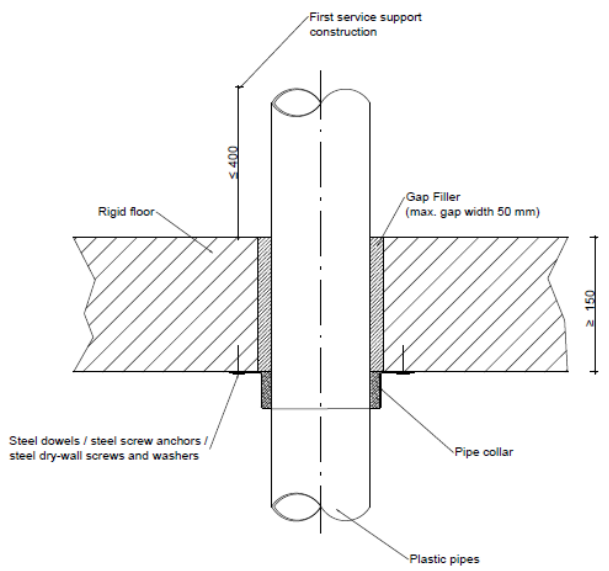

Application of combustible pipe without insulation with angle between 45° and 90° in rigid floor

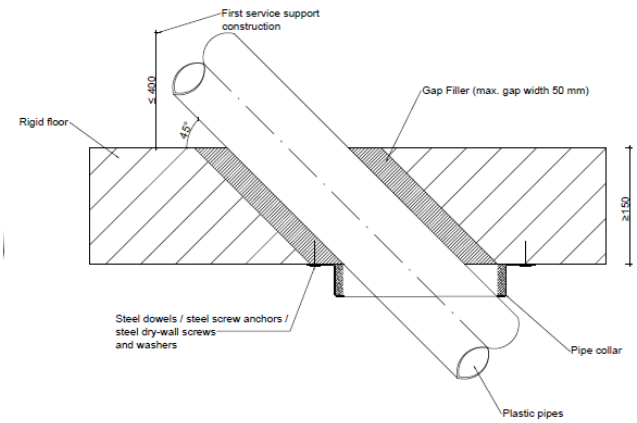

Application of combustible pipe with sound insulation in rigid floor

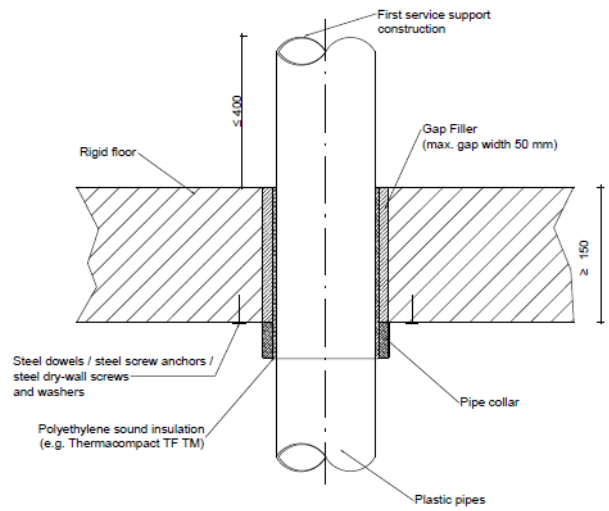

Application of combustible pipe with sound insulation in rigid floor (corner application)

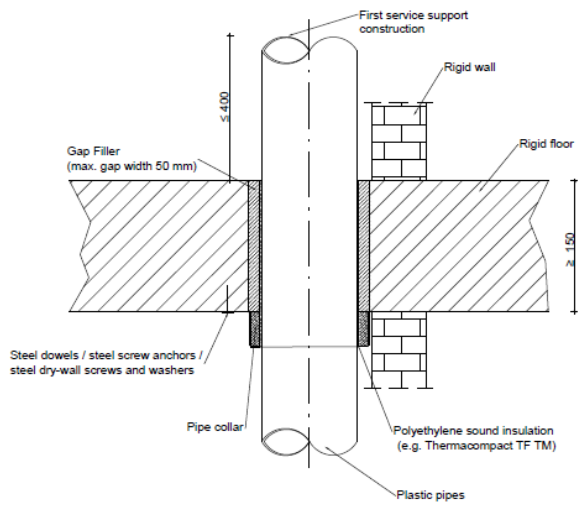

Application of combustible pipe without insulation with angle between 45° and 90° in flexible wall and rigid wall

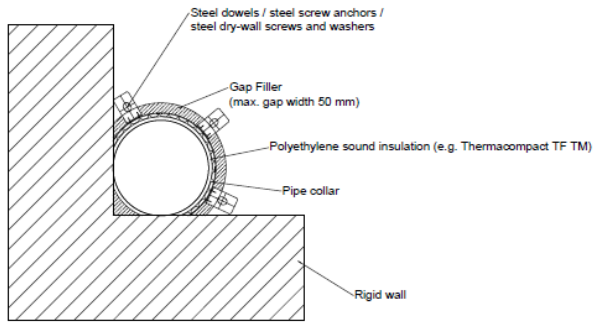

Application of combustible pipe with FEF (flexible elastomeric foam) insulation in rigid floor

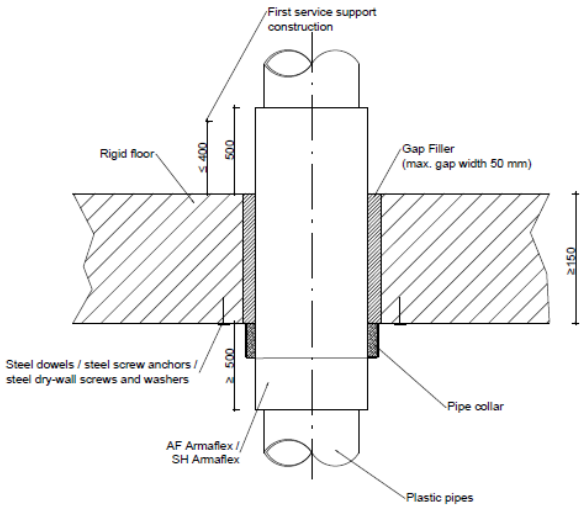

Application of combustible pipe with bow on the bottom side of the rigid floor and connection sleeve within the floor

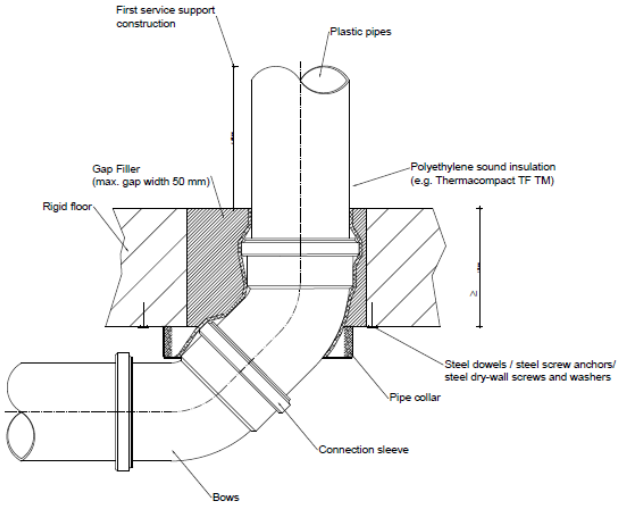

Application of combustible pipes in rigid floor (up to three pipes with zero distance)

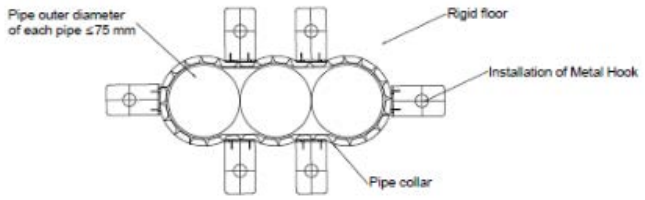

Application of non-combustible pipes with FEF (flexible elastomeric foam) insulation in rigid floor

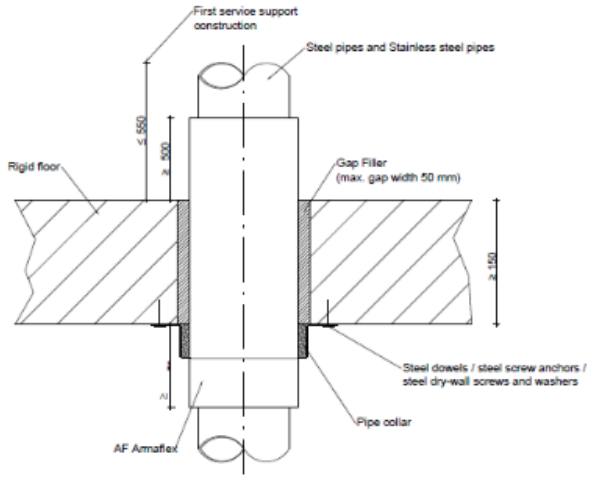

Resistance to fire

Wall applications

Pipe ø (mm)	Pipe wall thickness (mm)	Insulation (mm)	Intumescent inlay			Base material	Base material thickness (mm)	Classification
			EFC1	EFC2	No. of layers			
PVC-U pipes without insulation								
⩽ 50	1,8 - 5,6	-	x	x	2	flexible wall & rigid wall	flexible wall: ⩾ 94 rigid wall: ⩾ 100	EI 120-U/C
> 50 - ⩽ 75	1,8 - 8,4				3			
> 75 - ⩽ 110	1,8 - 12,3				4			
> 110 - ⩽ 125	2,2 - 12,2				5			
> 125 - ⩽ 160	3,2 - 11,9				6			
PVC-U pipes without insulation in an angle between 90° and 45°								
⩽ 50	1,8 - 5,6	-	x	x	2	flexible wall & rigid wall	flexible wall: ⩾ 94 rigid wall: ⩾ 100	EI 120-U/C
> 50 - ⩽ 75	1,8 - 8,4				3			
> 75 - ⩽ 110	1,8 - 12,3				4			
> 110 - ⩽ 125	2,2 - 12,2				6			
> 125 - ⩽ 160	3,2 - 11,9				8			EI 90-U/C
PVC-U pipes with Polyethylene sound insulation								
⩽ 50	1,8	⩽ 4 (PE)	x	x	4	flexible wall & rigid wall	flexible wall: ⩾ 94 rigid wall: ⩾ 100	EI 90-U/C (E 120-U/C)
> 50 - ⩽ 75	1,8				5			
> 75 - ⩽ 110	1,8				4			
> 110 - ⩽ 125	1,8 - 2,2				6			
⩽ 50	1,8 - 5,6		-		2			EI 120-U/U
> 50 - ⩽ 75	1,8 - 8,4				3			EI 90-U/U (E 120-U/U)
> 75 - ⩽ 110	1,8 - 11,9				4			
> 110 - ⩽ 125	3,2 - 11,9				5			
> 125 - ⩽ 160	3,2 - 11,9				6			EI 120-U/U

Pipe ø (mm)	Pipe wall thickness (mm)	Insulation (mm)	Intumescent inlay			Base material	Base material thickness (mm)	Classification
			EFC1	EFC2	No. of layers			
PE-HD pipes without insulation								
⩽ 50	1,8 - 4,6	-	x	x	2	flexible wall & rigid wall	flexible wall: ⩾ 94 rigid wall: ⩾ 100	EI 120-U/C
> 50 - ⩽ 75	1,8 - 8,4				3			
> 75 - ⩽ 110	2,7 – 10				4			
> 110 - ⩽ 160	4				8			
	> 4 - 14,6							EI 60-U/C
PE-HD pipes without insulation in an angle between 90° and 45°								
⩽ 50	1,8	-	x	x	2	flexible wall & rigid wall	flexible wall: ⩾ 94 rigid wall: ⩾ 100	EI 120-U/C
> 50 - ⩽ 75					4			EI 90-U/C
> 75 - ⩽ 110	2,7				5			
> 110 - ⩽ 125	3,2				7			
> 125 - ⩽ 160	4				8			
PE-HD pipes with Polyethylene sound insulation								
⩽ 50	1,8 - 4,6	⩽ 4 (PE)	x	x	2	flexible wall & rigid wall	flexible wall: ⩾ 94 rigid wall: ⩾ 100	EI 120-U/C
> 50 - ⩽ 75	1,8 - 6,8				3			
> 75 - ⩽ 110	1,8 – 10				4			
> 110 - ⩽ 160	4				6			EI 90-U/C (E 120-U/C)
	>4 -14,6							
⩽ 50	1,8 - 4,6		-		2			EI 120-U/U
> 50 - ⩽ 75	2,7				3			
> 75 - ⩽ 110					4			

Pipe ø (mm)	Pipe wall thickness (mm)	Insulation (mm)	Intumescent inlay			Base material	Base material thickness (mm)	Classification
			EFC1	EFC2	No. of layers			
PP pipes without insulation								
⩽ 50	1,8 - 4,6	-	x	x	2	flexible wall & rigid wall	flexible wall: ⩾ 94 rigid wall: ⩾ 100	EI 120-U/C
> 50 - ⩽ 75	1,8 - 8,4				3			
> 75 - ⩽ 110	2,7 – 10				4			
> 110 - ⩽ 160	4				8			EI 90-U/C (E120-U/C)
	> 4 - 14,6				6			EI 90-U/C
PP pipes without insulation in an angle between 90° and 45°								
⩽ 50	1,8	-	x	x	2	flexible wall & rigid wall	flexible wall: ⩾ 94 rigid wall: ⩾ 100	EI 120-U/C
50 - ⩽ 75					3			
> 75 - ⩽ 110	2,7				4			
PP pipes with Polyethylene sound insulation								
⩽ 50	1,8 - 4,6	4 (PE)	-	x	2	flexible wall & rigid wall	flexible wall: ⩾ 94 rigid wall: ⩾ 100	EI 120-U/U
50 - ⩽ 75	1,8 - 2,7				3			
> 75 - ⩽ 110	2,7				4			

Pipe ø (mm)	Pipe wall thickness (mm)	Insulation (mm)	Intumescent inlay			Base material	Base material thickness (mm)	Classification
			EFC1	EFC2	No. of layers			
alpex F50 PROFI pipes without insulation								
⩽ 16	2	-	x	x	2	flexible wall & rigid wall	flexible wall: ⩾ 94 rigid wall: ⩾ 100	EI 120-U/C
alpex F50 PROFI and alpex L pipes with SH/ArmaFlex insulation (length ⩾ 500mm - on both sides of the separating element, local-sustained LS or continued- sustained CS)								
⩽ 16	2	9	x	x	2	flexible wall & rigid wall	flexible wall: ⩾ 94 rigid wall: ⩾ 100	EI 120-U/C
⩽ 50	4	10			3			EI 60-U/C (E 120-U/C)
⩽ 75	5	9			4			EI 90-U/C (E 120-U/C)
		> 9 - 20			5			EI 90-U/C
		> 20 – 30			6			EI 90-U/C (E 120-U/C)
		>30 - 44						
alpex F50 PROFI and alpex L pipes with AF/ArmaFlex insulation (length ⩾ 500mm - on both sides of the separating element, local-sustained LS or continued- sustained CS)								
⩽ 75	5	9,5	x	x	4	flexible wall & rigid wall	flexible wall: ⩾ 94 rigid wall: ⩾ 100	EI 120-U/C
		9,5 – 20			5			
		20 - 30			6			

Pipe ø (mm)	Pipe wall thickness (mm)	Insulation (mm)	Intumescent inlay			Base material	Base material thickness (mm)	Classification
			EFC1	EFC2	No. of layers			
aquatherm green pipes MS pipes without insulation								
⩽ 16	2,2	-	x	x	2	flexible wall & rigid wall	flexible wall: ⩾ 94 rigid wall: ⩾ 100	EI 120-U/C
⩽ 50	6,9							
⩽ 75					3			
⩽ 110	15,2				4			
aquatherm green pipes MS pipes with SH/ArmaFlex insulation (length ⩾ 500 mm - on both sides of the separating element, local-sustained LS or continued- sustained CS)								
⩽16	2,2	9	x	x	3	flexible wall & rigid wall	flexible wall: ⩾ 94 rigid wall: ⩾ 100	EI 120-U/C
⩽50	6,9	10						
aquatherm green pipes MS pipes with AF/ArmaFlex insulation (length ⩾ 500mm - on both sides of the separating element, local-sustained LS or continued-sustained CS)								
⩽ 110	15,2	31	x	x	6	flexible wall & rigid wall	flexible wall: ⩾ 94 rigid wall: ⩾ 100	EI 120-U/U
BluePower pipes with Polyethylene sound insulation								
⩽ 50	1,8	⩽ 4 (PE)	x	x	2	flexible wall & rigid wall	flexible wall: ⩾ 94 rigid wall: ⩾ 100	EI 120-U/C
⩽ 75	2,5				3			
⩽ 110	3,4				4			

Pipe ø (mm)	Pipe wall thickness (mm)	Insulation (mm)	Intumescent inlay			Base material	Base material thickness (mm)	Classification
			EFC1	EFC2	No. of layers			
Geberit Silent-PP pipes with Polyethylene sound insulation								
⩽ 50	2	⩽ 4 (PE)	x	x	2	flexible wall & rigid wall	flexible wall: ⩾ 94 rigid wall: ⩾ 100	EI 120-U/C
⩽ 75	2,6				3			EI 90-U/C (E 120-U/C)
					4			EI 120-U/C
⩽ 110	3,6							EI 90-U/C (E 120-U/C)
					5			EI 120-U/C
⩽ 125	4,2				6			
⩽ 160	5,2				8			
⩽ 50	2		-		2			EI 120-U/U
⩽ 75	2,6				3			
⩽ 110	3,6				4			
⩽ 125	4,2				5			
⩽ 160	5,2				6			
POLO-KAL NG pipes with Polyethylene sound insulation								
⩽ 50	2	⩽ 4 (PE)	x	x	2	flexible wall & rigid wall	flexible wall: ⩾ 94 rigid wall: ⩾ 100	EI 120-U/C
⩽ 75	2,6				3			EI 90-U/C (E 120-U/C)
⩽ 110	3,4				4			
					5			EI 120-U/C
⩽ 125	3,9				6			
⩽ 160	4,9		-		2			EI 120-U/U
⩽ 50	2				3			
⩽ 75	2,6				4			
⩽ 110	3,4				5			
⩽ 125	3,9				6			
⩽ 160	4,9							

Pipe ø (mm)	Pipe wall thickness (mm)	Insulation (mm)	Intumescent inlay			Base material	Base material thickness (mm)	Classification
			EFC1	EFC2	No. of layers			
RAUPIANO PLUS pipes with Polyethylene sound insulation								
⩽ 50	1,8	⩽ 4 (PE)	x	x	2	flexible wall & rigid wall	flexible wall: ⩾ 94 rigid wall: ⩾ 100	EI 120-U/C
⩽ 75	1,9				3			
⩽ 110	2,7				4			
⩽ 125	3,1				5			
⩽ 160	3,6				6			
⩽ 50	1,8		-		2			
⩽ 75	1,9				3			
⩽ 110	2,7				4			
Triplus pipes with Polyethylene sound insulation								
⩽ 40	1,8	⩽ 4 (PE)	x	x	2	flexible wall & rigid wall	flexible wall: ⩾ 94 rigid wall: ⩾ 100	EI 120-U/C (E 120-U/C)
⩽ 75	2,5				3			
⩽ 90	3,1				4			
⩽ 110	3,4				5			
⩽ 125	3,9				6			
⩽ 160	4,9				8			

Pipe ø (mm)	Pipe wall thickness (mm)	Insulation (mm)	Intumescent inlay			Base material	Base material thickness (mm)	Classification
			EFC1	EFC2	No. of layers			
Uponor Unipipe MLC multi-layer composite pipes without insulation								
⩽ 16	2	-	x	x	2	flexible wall & rigid wall	flexible wall: ⩾ 94 rigid wall: ⩾ 100	EI 120-U/C
Uponor Unipipe MLC multi-layer composite pipes with SH/ArmaFlex insulation (length ⩾ 500mm - on both sides of the separating element, local-sustained LS or continued-sustained CS)								
⩽ 16	2	9	x	x	2	flexible wall & rigid wall	flexible wall: ⩾ 94 rigid wall: ⩾ 100	EI 120-U/C
⩽ 50	4,5	10			3			EI 60-U/C (E 120-U/C)
⩽ 110	10	9			6			EI 120-U/C
		⩽ 9 - 20						EI 90-U/C (E 120-U/C)
Uponor Unipipe MLC multi-layer composite pipes with AF/ArmaFlex insulation (length ⩾ 500mm - on both sides of the separating element, local-sustained LS or continued-sustained CS)								
⩽ 50	4,5	27,5	x	x	4	flexible wall & rigid wall	flexible wall: ⩾ 94 rigid wall: ⩾ 100	EI 120-U/C
⩽ 110	10	9,5			6			
		19						EI 90-U/C (E 120-U/C)
		30						EI 120-U/C
Wavin SiTech+ pipes with Polyethylene sound insulation								
⩽ 50	2	⩽ 4 (PE)	x	x	2	flexible wall & rigid wall	flexible wall: ⩾ 94 rigid wall: ⩾ 100	EI 120-U/C
⩽ 110	3,6				4			EI 90-U/C (E 120-U/C)
					5			EI 120-U/C
⩽ 160	5,3				8			
⩽ 50	2		-		2			EI 120-U/U
⩽ 75	2,6				3			
⩽ 110	3,6				4			

Pipe ø (mm)	Pipe wall thickness (mm)	Insulation (mm)	Intumescent inlay			Base material	Base material thickness (mm)	Classification
			EFC1	EFC2	No. of layers			
Multiple penetration of maximum three plastic pipes made from PVC-U, PE-HD or PP without insulation through one concerted pipe collar ArmaProtect EFC1 / EFC2 (clearance between pipes maximum 15mm; linear arrangement, no clusters)								
⩽ 75	1,8 - 8,4	-	x	x	4	flexible wall & rigid wall	flexible wall: ⩾ 94 rigid wall: ⩾ 100	EI 120-U/C
Metal pipes (copper pipes, steel pipes, stainless steel pipes) with AF/ArmaFlex insulation (length 500mm - on both sides of the separating element, local-sustained LS or continued-sustained CS)*								
⩽ 28	1 - 14,2	6 – 35	x	x	2	flexible wall & rigid wall	flexible wall: ⩾ 94 rigid wall: ⩾ 100	EI 120-C/U
⩽ 54	1,5 - 14,2	9 – 35						EI 60-C/U (E 120-C/U)
		35						EI 120-C/U
Metal pipes (copper pipes, steel pipes, stainless steel pipes) with AF/ArmaFlex insulation (length ⩾ 500 mm - on both sides of the separating element, local-sustained LS or continued-sustained CS) and an additional layer of AF/ArmaFlex (length 300 mm, thickness ⩾ 9 mm - on both sides of the separating element, local-interrupted LI)*								
⩽ 54	1,5 - 14,2	9 - 35	x	x	2	flexible wall & rigid wall	flexible wall: ⩾ 94 rigid wall: ⩾ 100	EI 90-C/U (E 120-C/U)

* the intumescent inlay has to be installed on both sides flushed within the separating element (without metal strap)

Floor Applications

Pipe ø (mm)	Pipe wall thickness (mm)	Insulation (mm)	Intumescent inlay			Base material	Base material thickness (mm)	Classification
			EFC1	EFC2	No. of layers			
PVC-U pipes without insulation								
⩽ 50	1,8 - 5,6	-	x	x	2	rigid floor	⩾ 150	EI 240-U/C
50 - ⩽ 75	1,8 - 8,4				3			
75 - ⩽ 110	1,8 - 12,3				4			
> 110 - ⩽ 125	2,2 - 12,1				5			EI 120-U/C
125 - ⩽ 160	3,2 - 11,9				6			
PVC-U pipes without insulation in an angle between 90° and 45°								
⩽ 50	1,8	-	x	x	2	rigid floor	⩾ 150	EI 120-U/C
75 - ⩽ 110	12,3				4			
110 - ⩽ 125	12,1				5			
125 - ⩽ 160	11,9				6			
	3,2				8			
PE-HD pipes without insulation								
⩽ 50	1,8 - 4,6	-	x	x	2	rigid floor	⩾ 150	EI 240-U/C
> 50 - ⩽ 75	1,8 - 8,4				3			
> 75 - ⩽ 110	> 2,7 - 10				4			EI 180-U/C (E 240-U/C)
> 110 - ⩽ 160	> 4 - 14,6				6			EI 120-U/C (E 240-U/C)
PE-HD pipes without insulation in an angle between 90° and 45°								
⩽ 50	4,6	-	x	x	2	rigid floor	⩾ 150	EI 120-U/C
> 50 - ⩽ 110	2,7 - 10				4			
PE-HD pipes with Polyethylene insulation								
⩽ 50	1,8	⩽ 4 (PE)	x	x	2	rigid floor	⩾ 150	EI 120-U/C
> 50 - ⩽ 75	2,2				3			
> 75 - ⩽ 110	2,7 - 10				4			
PE-HD pipes with Polyethylene insulation, positioned vertically directly in the corner of the wall (clearance between pipe and wall maximum 10mm)								
⩽ 110	10	⩽ 4 (PE)	x	x	4	rigid floor	⩾ 150	EI 120-U/C

Pipe ø (mm)	Pipe wall thickness (mm)	Insulation (mm)	Intumescent inlay			Base material	Base material thickness (mm)	Classification
			EFC1	EFC2	No. of layers			
PP pipes without insulation								
≤ 50	1,8 - 4,6	-	x	x	2	rigid floor	≥ 150	EI 240-U/C
> 50 - ≤ 75	1,8 - 8,4				3			
>75 - ≤ 110	> 2,7 - 10				4			EI 180-U/C
> 110 - ≤ 125	> 3,1 - 11,4				6			EI 120-U/C
> 125 - ≤ 160	> 4 - 14,6				8			
PP pipes without insulation in an angle between 90° and 45°								
≤ 110	2,7 – 10	-	x	x	4	rigid floor	≥ 150	EI 120-U/C
> 110 - ≤ 125	3,2 – 12				6			
> 125 - ≤ 160	4 - 14,6				8			
PP pipes with Polyethylene insulation, positioned vertically directly in the corner of the wall (clearance between pipe and wall maximum 10mm)								
≤ 110	2,7	≤ 4 (PE)	x	x	4	rigid floor	≥ 150	EI 120-U/C
alpex F50 PROFI and alpex L pipes without insulation								
≤ 16	2	-	x	x	2	rigid floor	≥ 150	EI 120-U/C
≤ 50	4	-			2			
≤ 75	5	-			4			
alpex F50 PROFI and alpex L pipes with SH/ArmaFlex insulation (length ≥ 500mm - on both sides of the separating element, local-sustained LS or continued- sustained CS)								
≤ 16	2	9	x	x	2	rigid floor	≥ 150	EI 120-U/C
≤ 75	5				4			
		9 - 20			5			
		20 - 30			6			
alpex F50 PROFI and alpex L pipes with AF/ArmaFlex insulation (length ≥ 500mm - on both sides of the separating element, local-sustained LS or continued- sustained CS)								
≤ 75	5	9,5	x	x	4	rigid floor	≥ 150	EI 120-U/C

Pipe ø (mm)	Pipe wall thickness (mm)	Insulation (mm)	Intumescent inlay			Base material	Base material thickness (mm)	Classification
			EFC1	EFC2	No. of layers			
aquatherm green pipes MS pipes without insulation								
⩽ 16	2,2	-	x	x	2	rigid floor	⩾ 150	EI 120-U/C
⩽ 50	7,9							
⩽ 75	11,8				3			
⩽ 110	17,2				4			
aquatherm green pipes MS pipes with SH/ArmaFlex insulation (length ⩾ 500mm - on both sides of the separating element, local-sustained LS or continued- sustained CS)								
⩽ 50	6,9	10	x	x	3	rigid floor	⩾ 150	EI 120-U/C
aquatherm green pipes MS pipes with AF/ArmaFlex insulation (length ⩾ 500mm - on both sides of the separating element, local-sustained LS or continued-sustained CS)								
⩽ 110	15,2	31	x	x	6	rigid floor	⩾ 150	EI 120-U/C
aquatherm SDR 11 pipes without insulation								
⩽ 315	28,6	-	x	x	20	floor	⩾ 150	EI 120-U/C
BluePower pipes with Polyethylene sound insulation								
⩽ 50	1,8	-	x	x	2	rigid floor	⩾ 150	EI 120-U/C
⩽ 75	2,5				4			EI 90-U/C
⩽ 110	3,4				5			
Geberit Silent-PP pipes with Polyethylene sound insulation								
⩽ 50	2	⩽ 4 (PE)	x	x	2	rigid floor	⩾ 150	EI 120-U/C
⩽ 75	2,6				3			
⩽ 110	3,6				4			
⩽ 50	2		-		2			EI 120-U/U
⩽ 75	2,6				3			
⩽ 110	3,6				4			
⩽ 125	4,2				5			
⩽ 160	5,2				6			

Pipe ø (mm)	Pipe wall thickness (mm)	Insulation (mm)	Intumescent inlay			Base material	Base material thickness (mm)	Classification
			EFC1	EFC2	No. of layers			
Geberit Silent-PP pipes with Polyethylene sound insulation, positioned vertically directly in the corner of the wall (clearance between pipe and wall maximum 10mm)								
≤ 110	3,6	≤ 4 (PE)	-	x	5	rigid floor	≥ 150	EI 120-U/U
Geberit Silent-PP pipes with Polyethylene sound insulation, bows on the bottom side of the floor and a connection sleeve within the floor								
≤ 50	2	≤ 4 (PE)	-	x	3	rigid floor	≥ 150	EI 120-U/U
≤ 75	2,6				4			
≤ 110	3,6				5			
POLO-KAL NG pipes with Polyethylene sound insulation								
≤ 50	2	≤ 4 (PE)	x	x	2	rigid floor	≥ 150	EI 90-U/C (E 120-U/C)
≤ 75	2,6				3			
≤ 110	3,4				4			EI 120-U/C
≤ 50	2		-		2			EI 120-U/U
≤ 75	2,6				3			
≤ 110	3,4				4			
≤ 125	3,9				5			
≤ 160	4,9				6			
POLO-KAL NG pipes with Polyethylene sound insulation, vertically directly in the corner of the wall (clearance between pipe and wall maximum 10mm)								
≤ 110	3,4	≤ 4 (PE)	-	x	5	rigid floor	≥ 150	EI 120-U/U
POLO-KAL NG pipes with Polyethylene sound insulation, with bows on the bottom side of the floor and a connection sleeve within the floor								
≤ 50	2	≤ 4 (PE)	-	x	3	rigid floor	≥ 150	EI 120-U/U
≤ 75	2,6				4			
≤ 110	3,4				5			

Pipe ø (mm)	Pipe wall thickness (mm)	Insulation (mm)	Intumescent inlay			Base material	Base material thickness (mm)	Classification
			EFC1	EFC2	No. of layers			
RAUPIANO PLUS pipes with Polyethylene sound insulation								
⩽ 50	1,8	⩽ 4 (PE)	-	x	2	rigid floor	⩾ 150	EI 120-U/U
⩽ 75	1,9				3			
⩽ 110	2,7				4			
⩽ 125	3,1				5			
⩽ 160	3,6				6			
RAUPIANO PLUS pipes with Polyethylene sound insulation, positioned vertically directly in the corner of the wall (clearance between pipe and wall maximum 10mm)								
⩽ 110	2,7	⩽ 4 (PE)	-	x	5	rigid floor	⩾ 150	EI 120-U/U
RAUPIANO PLUS pipes with Polyethylene sound insulation, with bows on the bottom side of the floor and a connection sleeve within the floor								
⩽ 50	2	⩽ 4 (PE)	-	x	3	rigid floor	⩾ 150	EI 120-U/U
⩽ 75	2,6				4			
⩽ 110	2,7				5			
Uponor Unipipe MLC multi-layer composite pipes without insulation								
⩽ 50	4,5	-	x	x	2	rigid floor	⩾ 150	EI 120-U/C
⩽ 75	7,5				3			EI 90-U/C
⩽ 110	10				4			
Uponor Unipipe MLC multi-layer composite pipes with SH/ArmaFlex (length ⩾ 500 mm - on both sides of the separating element, local-sustained LS or continued-sustained CS)								
⩽ 50	4,5	10	x	x	3	rigid floor	⩾ 150	EI 120-U/C
⩽ 63	6	9			4			
⩽ 90	8,5				5			
⩽ 110	10	> 9 - 20			6			
Uponor Unipipe MLC multi-layer composite pipes with AF/ArmaFlex insulation (length ⩾ 500mm - on both sides of the separating element, local-sustained LS or continued-sustained CS)								
⩽ 50	4,5	27,5	x	x	4	rigid floor	⩾ 150	EI 120-U/C
⩽ 75	7,5	30			5			
⩽ 110	10	9,5 - 31			6			

Pipe ø (mm)	Pipe wall thickness (mm)	Insulation (mm)	Intumescent inlay			Base material	Base material thickness (mm)	Classification
			EFC1	EFC2	No. of layers			
Wavin SiTech+ pipes with Polyethylene sound insulation								
⩽ 50	2	⩽ 4 (PE)	x	x	2	rigid floor	⩾ 150	EI 120-U/C
⩽ 75	2,6				3			
⩽ 110	3,6				4			
⩽ 125	4,2				5			EI 60-U/C
⩽ 160	5,3				6			
⩽ 50	2		-		2			EI 120-U/U
⩽ 75	2,6				3			
⩽ 110	3,6				4			
⩽ 125	4,2				5			
⩽ 160	5,3				6			
Wavin SiTech+ pipes with Polyethylene sound insulation, positioned vertically directly in the corner of the wall (clearance between pipe and wall maximum 10mm)								
⩽ 110	3,6	⩽ 4 (PE)	-	x	5	rigid floor	⩾ 150	EI 120-U/U
Wavin SiTech+ pipes with Polyethylene sound insulation, with bows on the bottom side of the floor and a connection sleeve within the floor								
⩽ 50	2	⩽ 4 (PE)	-	x	3	rigid floor	⩾ 150	EI 120-U/U
⩽ 75	2,6				4			
⩽ 110	3,6				5			
Multiple penetration of maximum three plastic pipes made from PVC-U, PE-HD or PP without insulation through one concerted pipe collar ArmaProtect EFC1 / EFC2 (clearance between pipes maximum 15mm; linear arrangement, no clusters)								
⩽ 75	1,8 - 8,4	-	x	x	4	rigid floor	⩾ 150	EI 120-U/C

Pipe Ø (mm)	Pipe wall thickness (mm)	Insulation (mm)	Intumescent inlay			Base material	Base material thickness (mm)	Classification
			EFC1	EFC2	No. of layers			
Metal pipes (copper pipes, steel pipes, stainless steel pipes) with AF/ArmaFlex insulation (length ≥ 500mm - on both sides of the separating element, local-sustained LS or continued-sustained CS)*								
≤ 28	1 - 14,2	6	x	x	2	rigid floor	≥ 150	EI 120-C/U
		6 - < 20			3			
		> 20 – 35			4			
Metal pipes (copper pipes, steel pipes, stainless steel pipes) with AF/ArmaFlex insulation (length 500mm - on both sides of the separating element, continued-sustained CS)*								
≤ 54	1,5 - 14,2	9	x	x	2	rigid floor	≥ 150	EI 120-C/U
		> 9 - 22			3			
		> 22 – 35			4			
≤ 89	2 - 14,2	13			2			
Metal pipes (steel pipes, stainless steel pipes) with AF/ArmaFlex insulation (length 500mm - on both sides of the separating element, local-sustained LS or continued-sustained CS)*								
≤ 108	2 - 14,2	13 - 30	x	x	2	rigid floor	≥ 150	EI 120-C/U

* the intumescent inlays which have to be arranged one behind the other have to be installed flushed at the bottom of the the separating element (without metal strap)

TECHNICAL DATA - ARMAPROTECT EFC1 AND EFC2

Brief description	ArmaProtect EFC1 and EFC2 are endless firestop collars as solution for covering various pipe diameters and design variants.
Material type	Stainless steel strap with self-adhesive flexible intumescent strip on blowing graphite technology.
Product colour range	Stainless steel (strap) and anthrazite (intumescent strip).
Special features	Easy visual inspection.
Product range	Self-adhesive firestop wrap: 10 m x 40 mm x 2 mm, stainless steel strap: 3 m (including 18 hooks).
Applications	Endless Firestop collar for fire seals in walls and floors for combustible pipes (with and without insulation) and non-combustible pipes (with combustible insulation).
Installation	For professional use only. Refer to third party published listings, national approvals / assessments and Armacell's product literature for specific application details as well as before handling this product.
Declaration of Performance (DoP)	ArmaProtect EFC1 and ArmaProtect EFC2

Approvals and compliance

Specification compliance	• ETA 22/0061 acc. EN 1366-3

Property	Value/Assessment		Standard/Test method
Temperature range			
Operating temperature	-40°C to 70°C (40°F to 158°F)		
Application temperature	5°C to 25°C (41°F to 77°F)		
Storage and transportation temperature	5°C to 30°C (41°F to 77°F)		
Thermal conductivity			
Declared thermal conductivity	θm	0°C	
	λd [W/(m·K)]	0.403	
Mechanical properties			
Density	1200 ± 10 kg/m^3		
Start of intumescent reaction	> 190°C		
Expansion ratio	18 to 34 fold		
Blowing pressure	> 0.8 N/mm^2		
Fire performance			
Reaction to fire	Class A1 (stainless steel collar) / Class E (intumescent strip)		EN 13501-1
Resistance to fire	See Annex		
Health and environment			
Emission of dangerous substances	No dangerous substances.		ETA 22/0061
Other technical features			
Durability and serviceability	Use category type $Ý_1$		EOTA TR 024
Safety information	Please refer to the safety data sheet available on our website.		
Shelf life	No shelf life.		
Storage	Store in a cool and dry place with an ambient temperature of 5 °C to 25 °C and protect from frost and sunlight.		

ArmaFlex Protect
Tubes and sheets

MAIN APPLICATIONS

Base material	Flexible wall, concrete wall, aerated concrete wall, masonry wall, concrete floor
Base material thickness	⩾ 100mm (wall) ⩾ 150mm (floor)
Penetrants Non-combustible pipe with insulations • Steel pipes Ø ⩽ 323,9mm • Copper pipes Ø ⩽ 108mm	up to EI 120-C/U[1]

[1] See ETA-11/0454 for further installation details

// Field of application and installation details[1]

Installation details

Base material thickness	
Flexible wall (drywall) or rigid wall (concrete, aerated concrete, masonry)	≥ 100mm (for flexible wall: ≥ 94mm)
Rigid floor (concrete, aerated concrete) (density ≥550 kg/m³)	≥ 150mm

Annular gap	≤ 50mm
Gap filler	Mineral construction material (class A1 or A2-s1,d0), eg. cement, mortar or gypsum For flexible walls: gypsum joint filler from both sides with loose mineral wool inside
Accessories	ArmaFlex self-adhesive tape ArmaFlex 520 adhesive

First support of the pipes both-sided of the separating element	≤ 650mm

Distances	≥ 0mm between pipes ≤ 88,9mm insulated with ArmaFlex Protect (measured from the surface of the ArmaFlex Protect or AF/ ArmaFlex insulation) ≥ 100mm between pipes > 88,9mm insulated with ArmaFlex Protect (measured from the surface of the ArmaFlex Protect or AF/ ArmaFlex insulation)

[1] Please see further installation detail in the ETA-11/0454

Applications

Application with alpex F 50 PROFI pipes Ø ≤ 32mm, alpex L pipes Ø ≤ 75mm, copper pipes Ø ≤ 89,9mm and steel pipes Ø ≤ 168,3mm in flexible wall and rigid wall

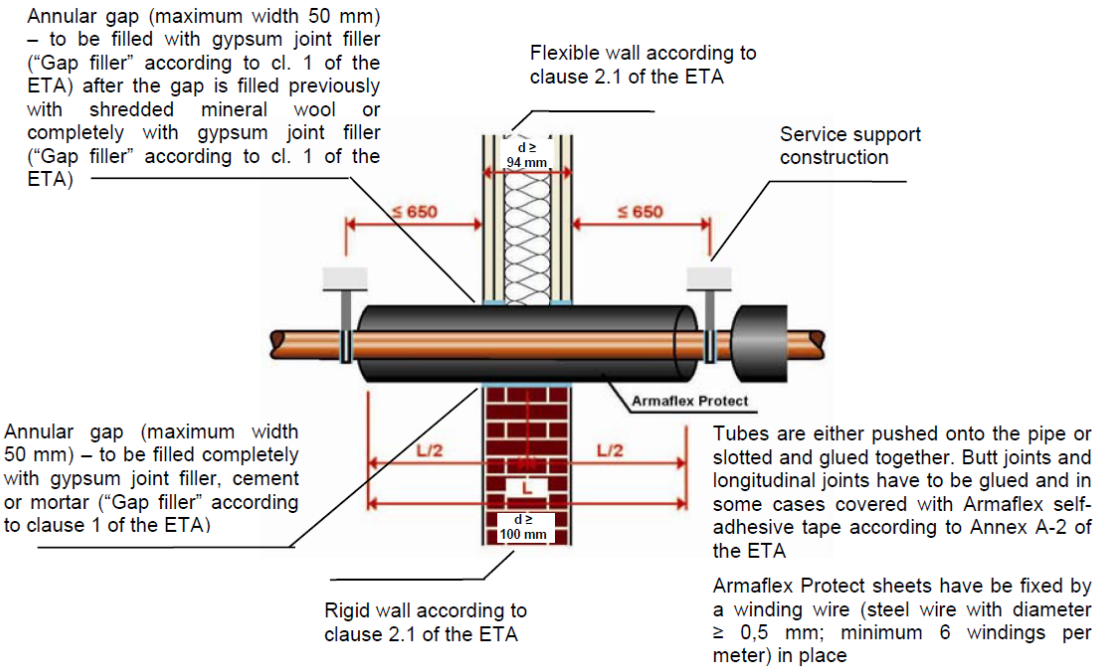

Application with alpex F 50 PROFI pipes Ø ≤ 32mm, alpex L pipes Ø ≤ 75mm, copper pipes Ø ≤ 108mm and steel pipes Ø ≤ 326mm in rigid floor

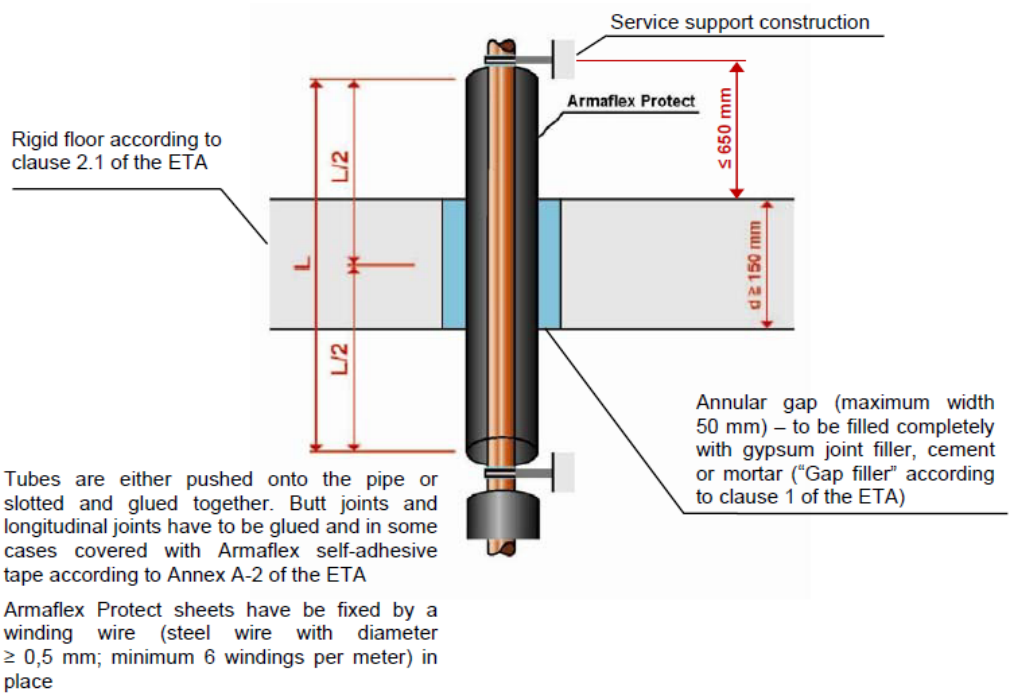

Resistance to fire - Wall applications

Non-combustible pipes

Pipe ø (mm)	Pipe wall thickness (mm)	ArmaFlex Protect insulation – LS or CS (mm)	AF/ArmaFlex - continuing insulation	Base material	Base material thickness (mm)	Classification
Copper, steel, stainless steel or cast-iron steel pipes with ArmaFlex Protect insulation						
⩽ 8	1 - 14,2	⩾ 500mm x 16mm	-	flexible wall & rigid wall	flexible wall: ⩾ 94 rigid wall: ⩾ 100	EI 120-C/U
> 8 - ⩽ 15		⩾ 500mm x 19mm				EI 90-C/U (E 120-C/U)
> 15 - ⩽ 25		⩾ 500mm x 20mm				
> 25 - ⩽ 35		⩾ 500mm x 25mm				EI 120-C/U
> 35 - ⩽ 42	1,5 - 14,2	⩾ 1000mm x 25mm				
> 42 - ⩽ 88,9	2 - 14,2					
> 88,9 - ⩽ 108	2,5 - 14,2					EI 90-C/U (E 120-C/U)
Steel, stainless steel or cast-iron steel pipes with ArmaFlex Protect insulation						
> 108 - ⩽ 168,3	3 - 14,2	⩾ 500mm x 26mm	⩾ 450mm x 25mm	flexible wall & rigid wall	flexible wall: ⩾ 94 rigid wall: ⩾ 100	EI 45-C/U (E 120-C/U)

Multi-layer composite pipes

Pipe ø (mm)	Pipe wall thickness (mm)	ArmaFlex Protect insulation – LS or CS (mm)	AF/ArmaFlex - continuing insulation	Base material	Base material thickness (mm)	Classification
alpex F50 PROFI pipes with ArmaFlex Protect insulation						
16	2	⩾ 500mm x 20mm	-	flexible wall & rigid wall	flexible wall: ⩾ 94 rigid wall: ⩾ 100	EI 120-U/C
20						
26	3					
32		⩾ 500mm x 25mm				
alpex L PROFI pipes with ArmaFlex Protect insulation						
40	3,5	⩾ 500mm x 25mm	-	flexible wall & rigid wall	flexible wall: ⩾ 94 rigid wall: ⩾ 100	EI 120-U/C
50	4					
63	4,5					
75	5					

Floor applications

Non-combustible pipes

Pipe ø (mm)	Pipe wall thickness (mm)	ArmaFlex Protect insulation – LS or CS (mm)	AF/ArmaFlex - continuing insulation	Base material	Base material thickness (mm)	Classification
Copper, steel, stainless steel or cast-iron steel pipes with ArmaFlex Protect insulation						
⩽ 8	1 - 14,2	⩾ 500mm x 16mm	-	rigid floor	⩾ 150	EI 120-C/U
> 8 - ⩽ 15		⩾ 500mm x 19mm				
> 15 - ⩽ 25		⩾ 500mm x 20mm				
> 25 - ⩽ 35		⩾ 500mm x 25mm				
> 35 - ⩽ 42	1,5 - 14,2	⩾ 1000mm x 25mm				
> 42 - ⩽ 88,9	2 - 14,2					
Copper, steel, stainless steel or cast-iron steel pipes with ArmaFlex Protect insulation						
> 88,9 - ⩽ 168,3	2,5 - 14,2	⩾ 1000mm x 25mm	⩾ 150mm x 25mm	rigid floor	⩾ 150	EI 90-C/U (E 120-C/U)
Steel, stainless steel or cast-iron steel pipes with ArmaFlex Protect insulation						
> 108 - ⩽ 168,3	2,9 - 14,2	⩾ 500mm x 26mm	⩾ 450mm x 25mm	rigid floor	⩾ 150	EI 90-C/U (E 120-C/U)
> 168,3 - ⩽ 326	15,6 - 14,2		⩾ 750mm x 25mm			EI 60-C/U (E 90-C/U)

*The Maximum pipe wall thickness is limited to 14,2mm

Multi-layer composite pipes

Pipe ø (mm)	Pipe wall thickness (mm)	ArmaFlex Protect insulation – LS or CS (mm)	AF/ArmaFlex - continuing insulation	Base material	Base material thickness (mm)	Classification
alpex F50 PROFI pipes with ArmaFlex Protect insulation						
16	2	⩾ 500mm x 20mm	-	rigid floor	⩾ 150	EI 120-U/C
20						
26	3					EI 90-U/C (E 120-U/C)
32		⩾ 500mm x 25mm				
alpex F50 PROFI pipes with ArmaFlex Protect insulation						
40	3,5	⩾ 500mm x 25mm	-	rigid floor	⩾ 150	EI 120-U/C
50	4					EI 90-U/C (E 120-U/C)
63	4,5					EI 120-U/C
75	5					

Technical data

Brief description	Flexible fire seal and insulation for metal and composite pipes through fire-resistant walls and floors (up to EI 120).
Material type	Flexible elastomeric foam based on synthetic rubber
Colour	Black
Product Range	Available in tibe of 1,0 m length or sheet of 0,5 m x 3 m
Applications	Insulation and fire protection barrier for drinking water hot / cold, heating and refrigeration metal pipes up to 326mm diameter and composite pipes up to 75mm.
Installation	For professional use only. Refer to third party published listings, national approvals / assessments and Armacell's product literature for specific application details as well as before handling this product.
Assembly	Please refer to "ArmaFlex Application Manual" and "ArmaProtect System Comprehensive Compendium". For information on marine applications, please consult your local Armacell contact or get in touch with our Customer service.
Declaration of Performance (DoP)	Nr. 0543-CPR-2017-088

Approvals and compliance

Property	Value/Assessment	Standard/Test method
Temperature range		
Operating temperature	-50 °C to 85 °C (-58 °F to 185-50 °F)	Tested according to EN 14706, EN 14707 and 14304
Application temperature	0 °C to 35 °C (32 °F to 95 °F)	
Storage and transportation temperature	0 °C to 35 °C (32 °F to 95 °F)	
Thermal Conductivity		
Thermal Conductivity	ϑm 0°C λ ≤ 0,056 W/(m K)	Tested according to EN 12667 EN ISO 8497
Water vapour diffusion resistance		
Water vapour diffusion resistance	μ ≥ 7.000.	Tested according to EN 12086 and EN 13469
Fire performance		
Reaction to fire	Class E / E_L	
Resistance to fire	See Annex	
Health and environment		
Emission of dangerous substances	No dangerous substances	
Other technical features		
Durability and serviceability	Use category type Y_2	EOTA TR 024
UV resistance[1]	Protection against UV-radiation is necessary.	
Shelf life	No shelf life.	
Storage	Cartons shall be stored horizontally. Can be stored in dry, clean rooms at normal relative humidity (50 % - 70 %) and ambient temperature (0 °C - 35 °C). Minimum temperature for transport -50 °C under condition of frost-free storage before installation.	

[1] If ArmaFlex is applied under UV-radiation the material must be protected within 3 days with a covering.

ArmaFlex Protect – ideal for condensation control on refrigeration and coolant piping

Ø (pipe)	Line temperature / ambient temperature			
	+6°C / 23°C	0°C / 23°C	-5°C / 23°C	-10°C / 23°C
⩾ 10mm ⩽ 323,9mm	relative humidity ⩽ 80 %	relative humidity ⩽ 75 %	relative humidity ⩽ 70 %	relative humidity ⩽ 65 %

ArmaProtect Firestop products

Firestop mortar

Item	Description	Content
PRO-CM-20kg	ArmaProtect CM Firestop mortar	20 kg

Firestop coating. Colour: White

Item	Description	Content
PRO-ABLC-12.5kg	ArmaProtect ABLC Firestop coating packed in a pail	12.5 kg
PRO-ABLC-15kg	ArmaProtect ABLC Firestop coating packed in a pail	15 kg

Firestop filler mastic. Colour: White

Item	Description	Content
PRO-ABLF-12.5kg	ArmaProtect ABLF Firestop filler mastic packed in a pail	12.5 kg
PRO-ABLF-15kg	ArmaProtect ABLF Firestop filler mastic packed in a pail	15 kg
PRO-ABLF-310ml	ArmaProtect ABLF Firestop filler mastic packed in a cartridge	310 ml

Coated board system. Colour: White

Item	Description	Content
PRO-CB-60S1	ArmaProtect CB Coated firestop board 1000 mm x 600 mm x 60 mm S1 (one-side coated, dry-film thickness: 0.7 mm)	4 piece(s)
PRO-CB-60S2	ArmaProtect CB Coated firestop board 1000 mm x600 mm x 60 mm S2 (double-sided coated, dry-film thickness: 0.7 mm)	4 piece(s)

Firestop sealant. Colour: Grey.

Item	Description	Content
PRO-EXPS-310ml-gy	ArmaProtect EXPS Firestop sealant 310 ml cartridge	310 ml

Firestop cable tube and plug

Item	Description	Content
PRO-CT-C060	ArmaProtect CT Firestop Cable tube plug Ø 60 mm packed as a set of 10 soft plugs	1 set(s)
PRO-CT-C090	ArmaProtect CT Firestop Cable tube plug Ø 90 mm packed as a set of 10 soft plugs	1 set(s)
PRO-CT-C116	ArmaProtect CT Firestop Cable tube plug Ø 116 mm packed as a set of 10 soft plugs	1 set(s)
PRO-CT-L090	ArmaProtect CT Firestop Cable tube 300 mm / Ø 90 mm packed as 1 cable tube with 2 soft plugs	12 set(s)
PRO-CT-L116	ArmaProtect CT Firestop Cable tube 300 mm / Ø 116 mm packed as 1 cable tube with 2 soft plugs	6 set(s)
PRO-CT-M090	ArmaProtect CT Firestop Cable tube 200 mm / Ø 90 mm packed as 1 cable tube with 2 soft plugs	18 set(s)
PRO-CT-M116	ArmaProtect CT Firestop Cable tube 200 mm / Ø 116 mm packed as 1 cable tube with 2 soft plugs	8 set(s)
PRO-CT-S060	ArmaProtect CT Firestop Cable tube 150 mm / Ø 60 mm packed as 1 cable tube with 2 soft plugs	30 set(s)
PRO-CT-S090	ArmaProtect CT Firestop Cable tube 150 mm / Ø 90 mm packed as 1 cable tube with 2 soft plugs	24 set(s)
PRO-CT-S116	ArmaProtect CT Firestop Cable tube 150 mm / Ø 116 mm packed as 1 cable tube with 2 soft plugs	12 set(s)

Firestop wrap

Item	Description	Content
PRO-FW1-10m	ArmaProtect FW1 Firestop wrap	10m

Firestop wrap

Item	Description	Content
PRO-FW2-10m	ArmaProtect FW2 Firestop wrap	10m

Firestop wrap

Item	Description	Content
PRO-FW3-12.5m	ArmaProtect FW3 Firestop wrap	12.5m

Firestop collar

Item	Description	Content
PRO-FC1-050	ArmaProtect FC1 Firestop collar Ø 50 mm	1 piece(s)
PRO-FC1-063	ArmaProtect FC1 Firestop collar Ø 63 mm	1 piece(s)
PRO-FC1-075	ArmaProtect FC1 Firestop collar Ø 75 mm	1 piece(s)
PRO-FC1-090	ArmaProtect FC1 Firestop collar Ø 90 mm	1 piece(s)
PRO-FC1-110	ArmaProtect FC1 Firestop collar Ø 110 mm	1 piece(s)
PRO-FC1-125	ArmaProtect FC1 Firestop collar Ø 125 mm	1 piece(s)
PRO-FC1-140	ArmaProtect FC1 Firestop collar Ø 140 mm	1 piece(s)
PRO-FC1-160	ArmaProtect FC1 Firestop collar Ø 160 mm	1 piece(s)

Firestop collar

Item	Description	Content
PRO-FC2-032	ArmaProtect FC2 Firestop collar Ø 32 mm	1 piece(s)
PRO-FC2-040	ArmaProtect FC2 Firestop collar Ø 40 mm	1 piece(s)
PRO-FC2-050	ArmaProtect FC2 Firestop collar Ø 50 mm	1 piece(s)
PRO-FC2-063	ArmaProtect FC2 Firestop collar Ø 63 mm	1 piece(s)
PRO-FC2-075	ArmaProtect FC2 Firestop collar Ø 75 mm	1 piece(s)
PRO-FC2-090	ArmaProtect FC2 Firestop collar Ø 90 mm	1 piece(s)
PRO-FC2-110	ArmaProtect FC2 Firestop collar Ø 110 mm	1 piece(s)
PRO-FC2-125	ArmaProtect FC2 Firestop collar Ø 125 mm	1 piece(s)
PRO-FC2-140	ArmaProtect FC2 Firestop collar Ø 140 mm	1 piece(s)
PRO-FC2-160	ArmaProtect FC2 Firestop collar Ø 160 mm	1 piece(s)
PRO-FC2-180	ArmaProtect FC2 Firestop collar Ø 180 mm	1 piece(s)
PRO-FC2-200	ArmaProtect FC2 Firestop collar Ø 200 mm	1 piece(s)
PRO-FC2-225	ArmaProtect FC2 Firestop collar Ø 225 mm	1 piece(s)
PRO-FC2-250	ArmaProtect FC2 Firestop collar Ø 250 mm	1 piece(s)
PRO-FC2-280	ArmaProtect FC2 Firestop collar Ø 280 mm	1 piece(s)
PRO-FC2-300	ArmaProtect FC2 Firestop collar Ø 300 mm	1 piece(s)
PRO-FC2-315	ArmaProtect FC2 Firestop collar Ø 315 mm	1 piece(s)
PRO-FC2-355	ArmaProtect FC2 Firestop collar Ø 355 mm	1 piece(s)
PRO-FC2-400	ArmaProtect FC2 Firestop collar Ø 400 mm	1 piece(s)

Endless firestop collar

Item	Description	Content
PRO-EFC1-10m	ArmaProtect EFC1 Endless Firestop collar comprised of 10m firestop wrap and 3m stainless steel strap	1 set(s)
PRO-EFC2-10m	ArmaProtect EFC2 Endless Firestop collar comprised of 10m firestop wrap and 3m stainless steel strap	1 set(s)

ArmaFlex Protect tube

Length 1,0 m

Item	Pipe outside Ø (mm)	Insulation thickness (mm)	m/carton
PRO-AX-16X006	6	16	34
PRO-AX-16X008	9	16	30
PRO-AX-19X010	10	19	18
PRO-AX-19X012	12	19	17
PRO-AX-19X015	15	19	16
PRO-AX-20X016	16	20	14
PRO-AX-20X018	18	20	13
PRO-AX-20X020	20	20	12
PRO-AX-20X022	22	20	12
PRO-AX-20X025	25	20	11
PRO-AX-25X028	28	25	9
PRO-AX-25X032	32	25	8
PRO-AX-25X035	35	25	8
PRO-AX-25X040	40	25	6
PRO-AX-25X042	42	25	6
PRO-AX-25X048	48	25	5
PRO-AX-25X050	50	25	5
PRO-AX-25X054	54	25	5
PRO-AX-25X060	60	25	4
PRO-AX-25X063	63	25	4
PRO-AX-25X076	76	25	4
PRO-AX-25X089	89	25	4

ArmaFlex Protect sheets endless

Item	Roll length (m)	Width (m)	Insulation thickness (mm)	m²/carton	Roll / carton
PRO-AX-13MM/E	6	0,5	13	2 x 3	2

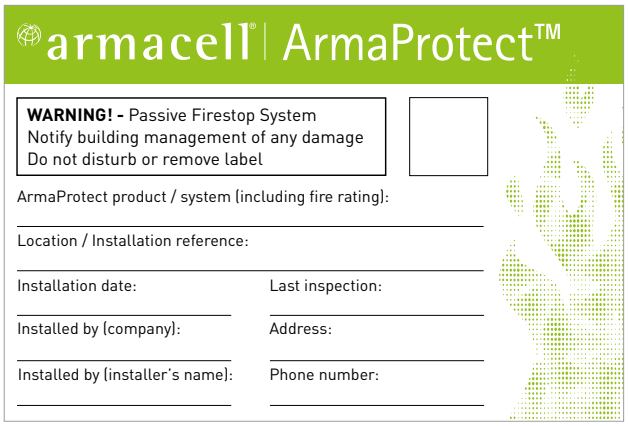
armacell | ArmaProtect™

WARNING! - Passive Firestop System
Notify building management of any damage
Do not disturb or remove label

ArmaProtect product / system (including fire rating):

Location / Installation reference:

Installation date: Last inspection:

Installed by (company): Address:

Installed by (installer's name): Phone number:

Firestop identification plate.

Item	Description	Content
PRO-ID-SET	ArmaProtect ID identification plate set	5 pieces

Abbreviations

CI	Continuous interrupted insulation
CS	Continuous sustained insulation
FEF	Flexible elastomeric insulation
LI	Local interrupted insulation
LS	Local sustained insulation
PEF	Polyethylene foam

00634 | ArmaProtect | Brochure | 102023 | EMEA | EN

ABOUT ARMACELL

As the inventors of flexible foam for equipment insulation and a leading provider of engineered foams, Armacell develops innovative and safe thermal, acoustic and mechanical solutions that create sustainable value for its customers. Armacell's products significantly contribute to global energy efficiency making a difference around the world every day. With more than 3,200 employees and 27 production plants in 19 countries, the company operates two main businesses, Advanced Insulation and Engineered Foams. Armacell focuses on insulation materials for technical equipment, high-performance foams for high-tech and lightweight applications and next-generation aerogel blanket technology.

For more information, please visit:
www.armacell.com

armacell®
ArmaProtect™